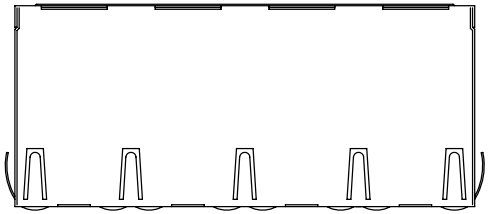

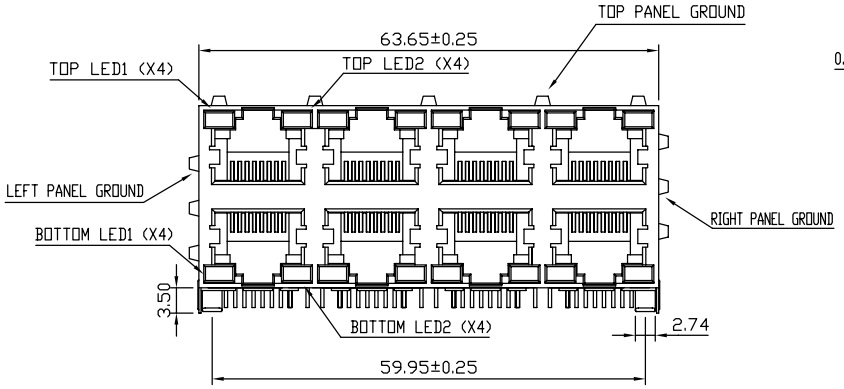

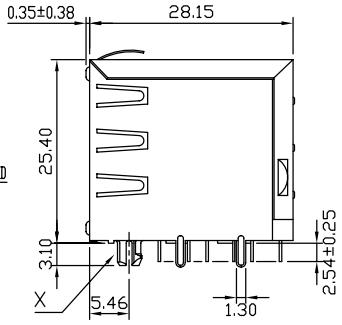

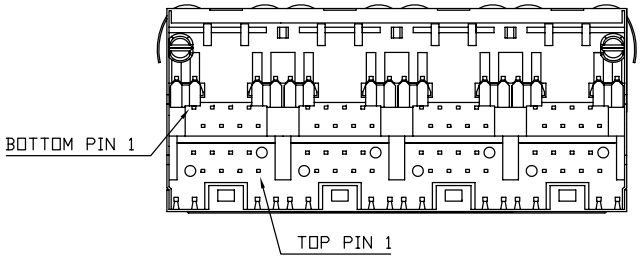

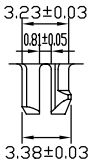

DETAIL X

MATERIALS:

- BOTTOM HOUSING-DSM STANYL TE250F6 (NYLON-46)
  HEAT DEFLECTION TEMP.290°
  BLACK COLOR, UL94V-0
- TOP HOUSING-PBT POLYESTER UL94V-0
  MIXED GLASS FIBER, BLACK COLOR.
- CONTACTS-0.35mm THICK PHOS-BRONZE PLATED
  WITH HARD GOLD AND GOLD FLASH IN
  SOLDER AREA.
- SHIELD-0.25mm THICK COPPER ALLOY,
  PLATED WITH NICKEL.

CAVITY CONFIRMS TO FCC RULES AND REGULATIONS

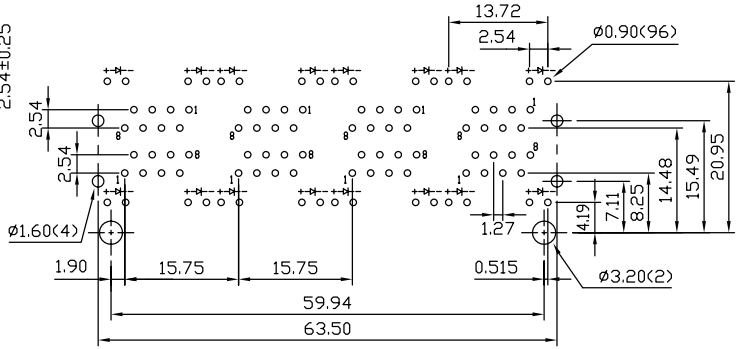

PCB LAYOUT
Ref.

Ordering Information

AJT37L	8	8	8	X	- 0	X	4
Type	Positions	Contacts	Ports	Plating 3 =30u" 4 =50u"			Tabs 4=Top & Side Tabs

	LED1	LED2
1=	Yellow	Green
2=	Green	Green
3=	Green	Yellow
4=	Green	Orange

	LED1	LED2
5=	Green	Red
6=	Red	Green
7=	Yellow	Yellow
8=	Grn/Ylw	Grn/Ylw
9=	Red/Grn	Red/Grn

Tolerance
unless otherwise specified
.0 ± .25
.00 ± .13
.000 ± .05

METZ CONNECT

P/N: AJT37L888X-0X4

Desc.: Side entry, shielded, LED, 2X4, thru hole modular jack

Date: 9-03-09
Dimensions in mm

Drawn By: Donna Mears
Verified By: Mike Balekdjian