MATERIAL:
- HOUSING-PBT POLYESTER UL-94V-0
  MIXED GLASS FIBER.
  STANDARD COLOR-BLACK
- CONTACTS-0.35mm THICK PHOS-BRONZE
  PLATED WITH HARD GOLD AND
  GOLD FLASH IN SOLDER AREA.
- SHIELD-0.25mm THICK COPPER ALLOY,
  PLATED WITH NICKEL.

CAVITY CONFIRMS TO FCC RULES AND REGULATIONS PART 68,SUBPART F.

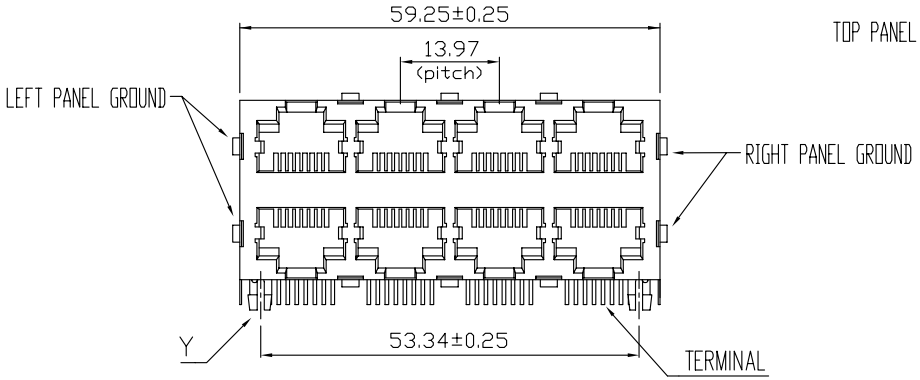

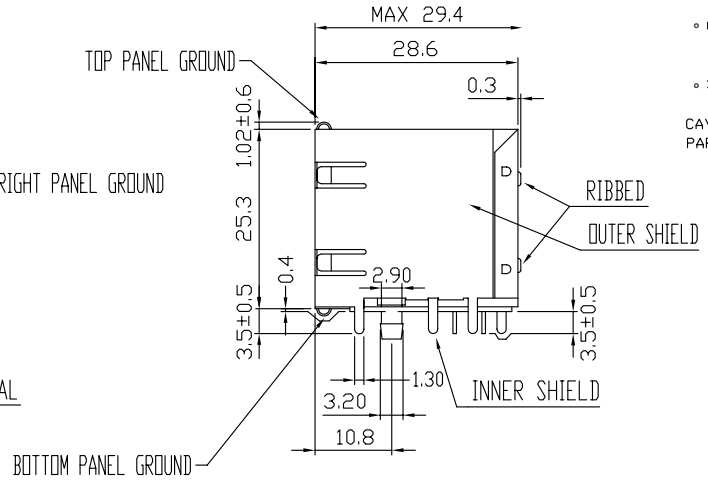

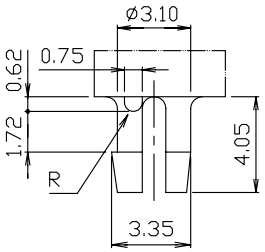

DETAIL Y

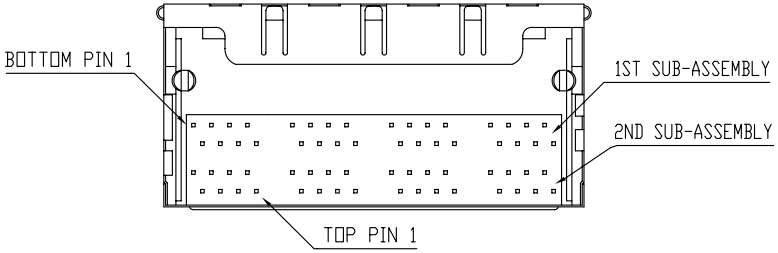

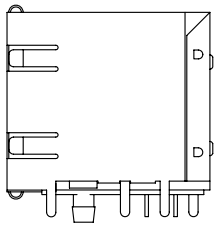

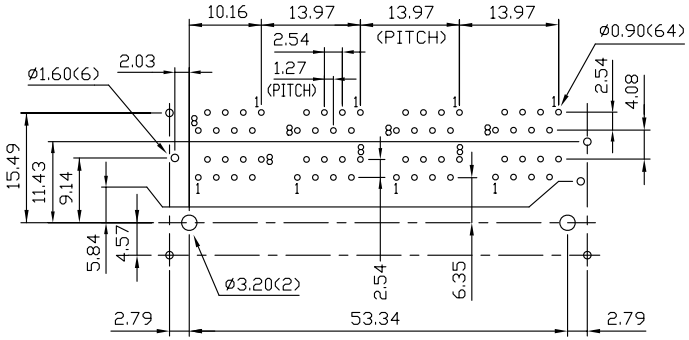

PCB LAYOUT
Ref.

Ordering Information

AJT49D	8	8	8	X
Type	*Positions*	*Contacts*	*Ports*	*Plating* 1 =6u" 3 =30u"

Tolerance unless otherwise specified mm
.0 ± .25
.00 ± .13
.000 ± .05

METZ CONNECT	P/N: AJT49D888X
Desc.: Side entry, 2 X 4, shielded, thru hole modular jack	
Date: 9-22-09 Dimensions in mm	Drawn By: Donna Mears Verified By: Mike Balekdjian