REVISIONS			
REV.	DESCRIPTION	DATE	APPROVED
A	REDRAWN IN SW	8/4/2010	BEM

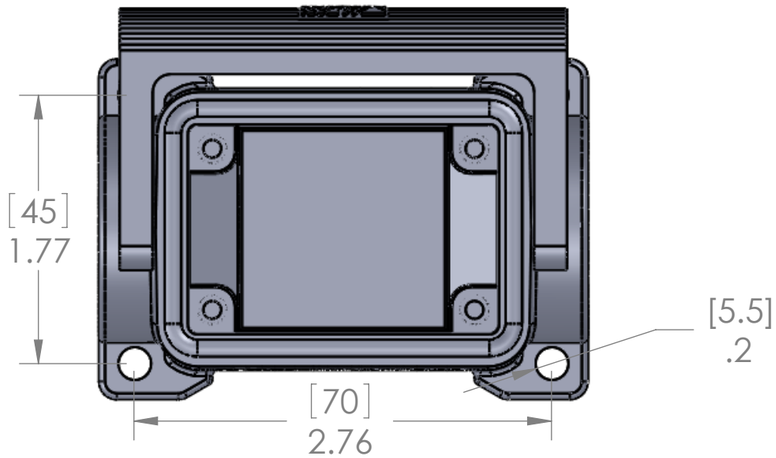

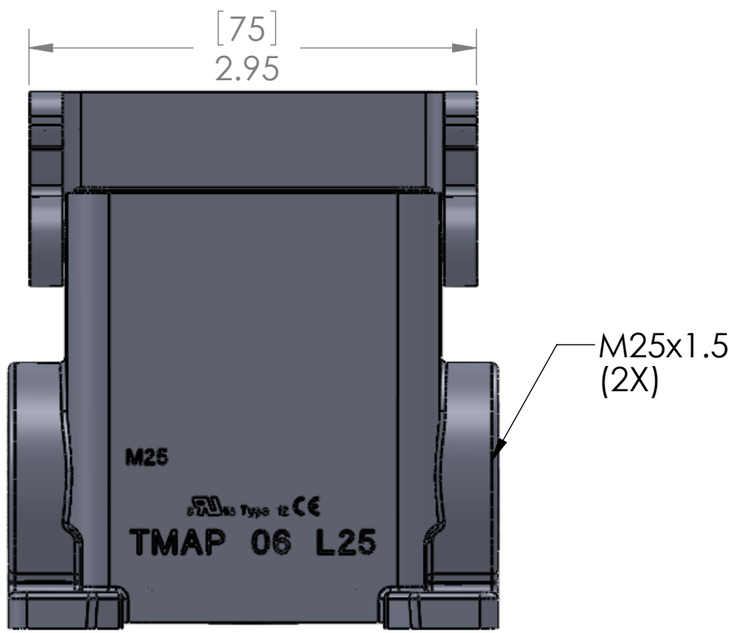

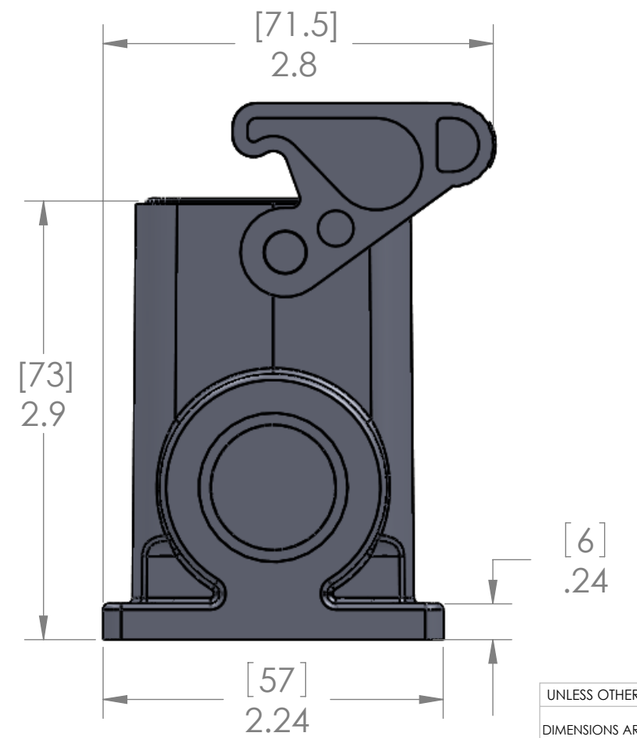

SEAL RATING OF IP 65 ONLY ACHIEVED WHEN FULLY LATCHED TO MATING HOOD

HOUSING MATERIALS	
BODY:	THERMOPLASTIC MATERIAL
GASKET:	THERMOPLASTIC ELASTOMER

PROPRIETARY AND CONFIDENTIAL
THE INFORMATION CONTAINED IN THIS DRAWING IS THE SOLE PROPERTY OF MENCOM CORPORATION. ANY REPRODUCTION IN PART OR AS A WHOLE WITHOUT THE WRITTEN PERMISSION OF MENCOM CORPORATION IS PROHIBITED.

UNLESS OTHERWISE SPECIFIED:
DIMENSIONS ARE IN INCHES &[MM]

MATERIAL

FINISH

DO NOT SCALE DRAWING

	NAME
DRAWN	CAM
CHECKED	
ENG APPR.	
MFG APPR.	
Q.A.	

COMMENTS:

MENCOM CORPORATION

TITLE:

SIZE	DWG. NO.	REV
B	TMAP-06L25	A

SCALE: 1:1 | WEIGHT: | SHEET 1 OF 1