REVISIONS			
REV.	DESCRIPTION	DATE	APPROVED
A	REDRAWN IN SW	5/4/2009	

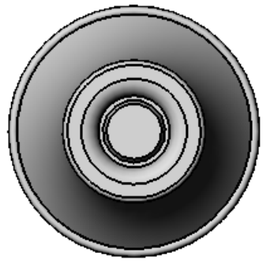

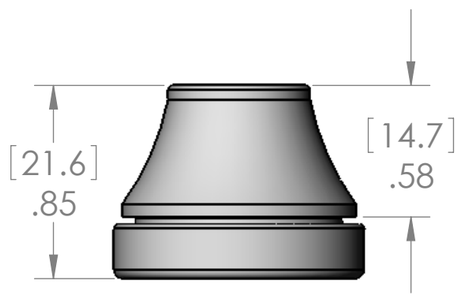

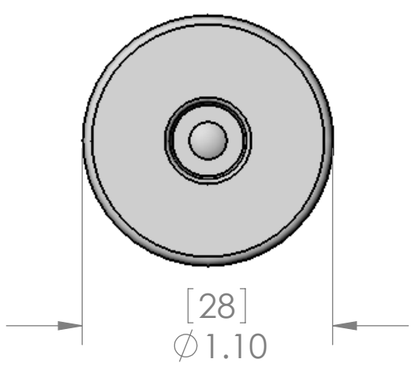

Panel Cutout	Panel Thickness	Sealing Range	Temperature Range
23mm	1 - 4mm	10 - 14mm	-40°C - +110°C

PROPRIETARY AND CONFIDENTIAL

THE INFORMATION CONTAINED IN THIS DRAWING IS THE SOLE PROPERTY OF MENCOM CORPORATION. ANY REPRODUCTION IN PART OR AS A WHOLE WITHOUT THE WRITTEN PERMISSION OF MENCOM CORPORATION IS PROHIBITED.

UNLESS OTHERWISE SPECIFIED:

DIMENSIONS ARE IN INCHES AND [MM]

	NAME
DRAWN	CAM
CHECKED	
ENG APPR.	
MFG APPR.	
Q.A.	

COMMENTS:

MATERIAL EPDM

COLOR LIGHT GRAY

DO NOT SCALE DRAWING

MENCOM CORPORATION

TITLE:

SIZE B | DWG. NO. SG-PG16-EGY | REV A

SCALE: 3:2 | WEIGHT: | SHEET 1 OF 1