| PIN # | COLOR |
|---|---|
| | |
| 1 | BLACK |
| 2 | GREEN / YELLOW |
| 3 | WHITE |

DEVICE IS INTENDED TO BE WIRED WITH CONDUCTORS RATED AT 75°C OR HIGHER

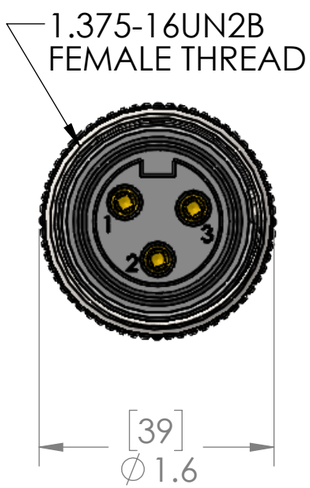


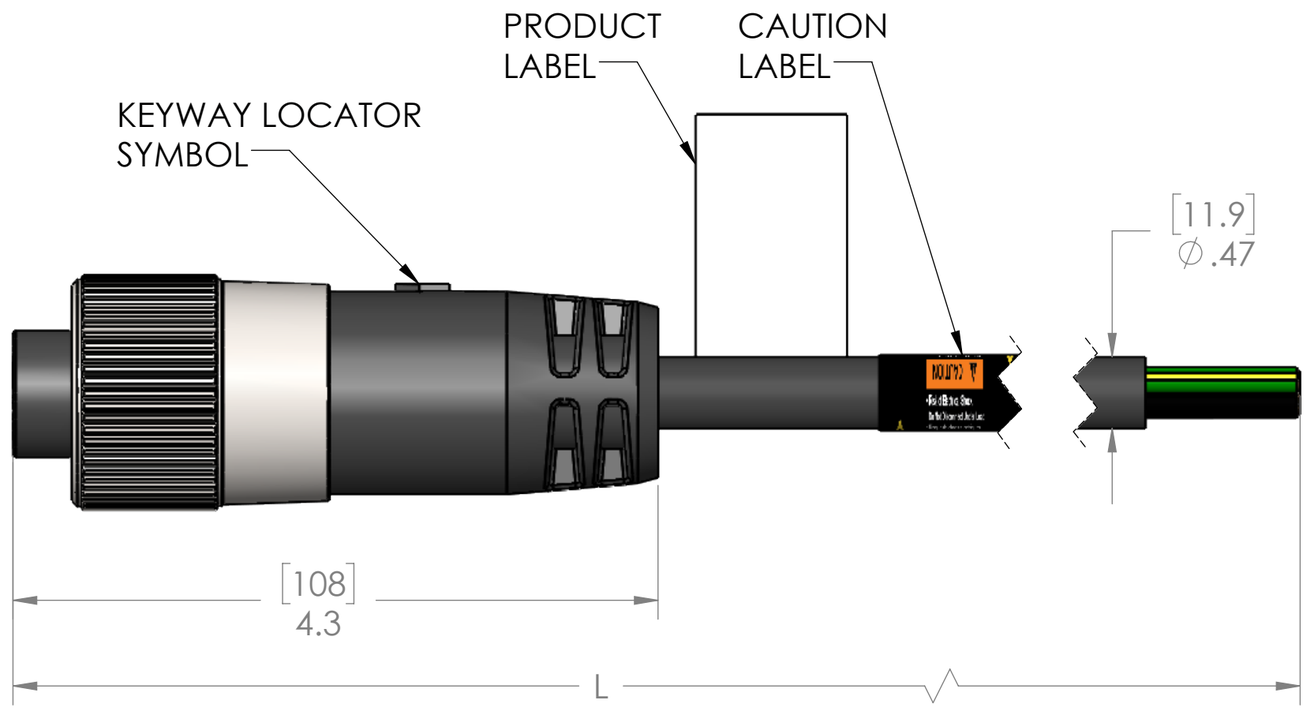


| P/N | L | STD? |
|---|---|---|
| | | |
| PMINW-30FP-1M-C011 | 40" [1m] | YES |
| PMINW-30FP-2M-C011 | 79" [2m] | YES |
| PMINW-30FP-3M-C011 | 117" [3m] | NO |
| PMINW-30FP-4M-C011 | 157" [4m] | NO |
| PMINW-30FP-5M-C011 | 197" [5m] | YES |
| PMINW-30FP-6M-C011 | 236" [6m] | NO |
| PMINW-30FP-8M-C011 | 315" [8m] | NO |
| PMINW-30FP-10M-C011 | 393" [10m] | YES |
| PMINW-30FP-15M-C011 | 590" [15M] | YES |
| PMINW-30FP-20M-C011 | 787" [20M] | NO |

PARTS LISTED AS NOT BEING STANDARD MAY REQUIRE MINIMUM ORDERS OTHER LENGTHS AVAILABLE, PLEASE CONSULT FACTORY

| MATERIALS | |
|---|---|
| BODY: | BLACK PVC |
| CONTACTS: | GOLD PLATED COPPER ALLOY |
| CABLE: | |
| STYLE: | TC-ER |
| AWG: | 10 AWG |
| JACKET: | BLACK PVC |
| VOLTAGE: | 600V |
| SHIELD: | NO |
| COUPLING: | NICKEL PLATED BRASS |
| INSERT: | BLACK PVC |
| | |
| RATINGS | |
| SCCR RATING: | 65 kA Breakers and Fuses |
| RoHS COMPLIANT: | YES |
| PROTECTION: | IEC IP67 |
| UL CATEGORY: | PVVA (US), PVVA7 (Canada) |
| U.S.: | UL 2237 LISTED, File E469485 |
| CANADA: | C-UL 2237 LISTED, File E469485 |

**CAUTION:**

**RISK OF ELECTRICAL SHOCK**
**DO NOT DISCONNECT UNDER LOAD**


**PROPRIETARY AND CONFIDENTIAL**
THE INFORMATION CONTAINED IN THIS DRAWING IS THE SOLE PROPERTY OF MENCOM CORPORATION. ANY REPRODUCTION IN PART OR AS A WHOLE WITHOUT THE WRITTEN PERMISSION OF MENCOM CORPORATION IS PROHIBITED.


| | |
|---|---|
| VOLTS | 600V |
| AMPS | 42A |
| TEMP: | -40° to 90°C |

UNLESS OTHERWISE SPECIFIED:
DIMENSIONS ARE IN INCHES AND [MM]

MATERIAL
FINISH
DO NOT SCALE DRAWING

| | |
|---|---|
| DRAWN BY | ADM |
| DRAWN DATE | 02/20/2024 |
| CHECKED BY | JJH |
| CHECK DATE | 02/20/2024 |

COMMENTS:

MENCOM CORPORATION

TITLE:
3 PL FEM PLG PMIN
10AWG

| SIZE | DWG. NO. | REV |
|---|---|---|
| B | PMINW-30FP-ZZ-C011 | C |

SCALE: 1:1 WEIGHT: SHEET 1 OF 1