PIN #	COLOR
1	BLACK
2	GREEN/YELLOW
3	WHITE

DEVICE IS INTENDED TO BE WIRED WITH CONDUCTORS RATED AT 75°C OR HIGHER

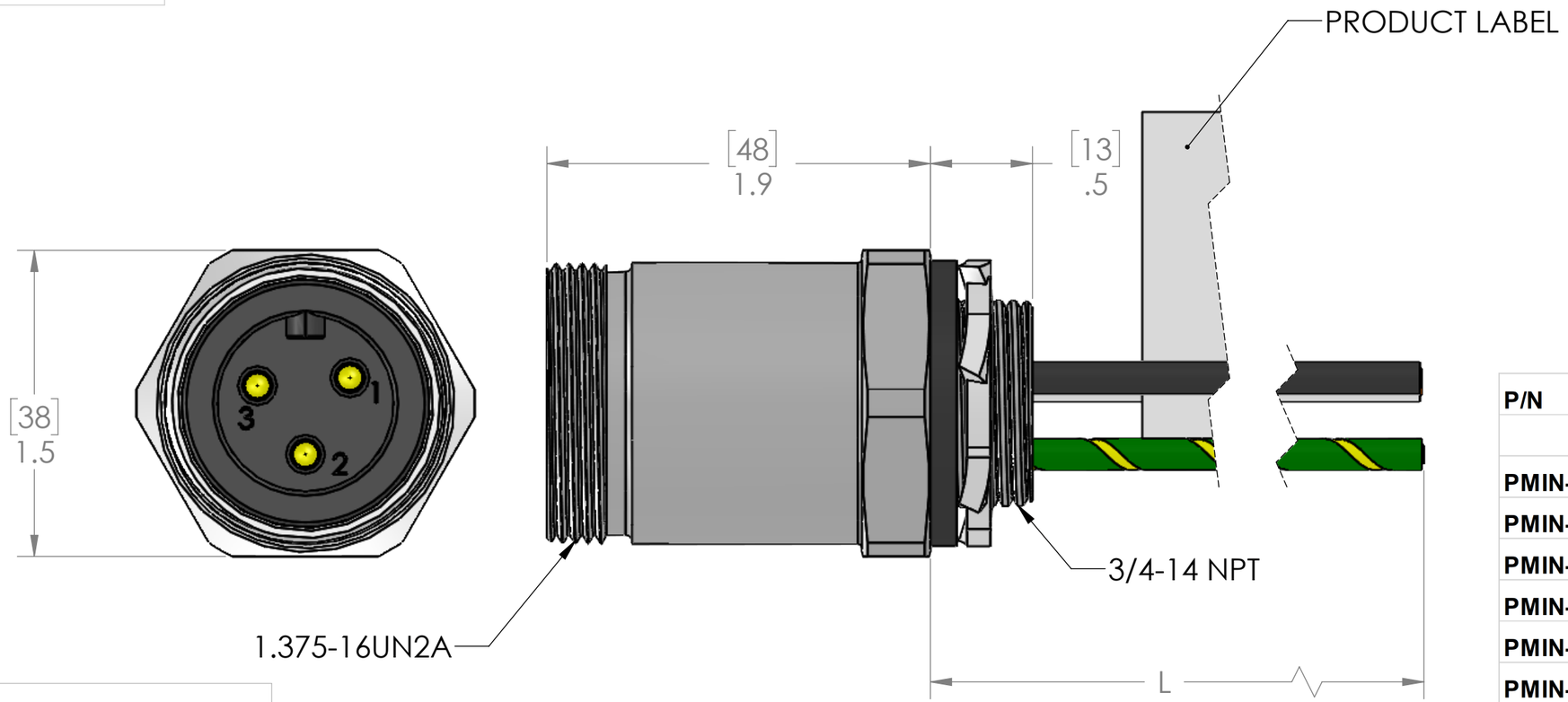

P/N	L
PMIN-32MR-0.3M-34	12" [0.3m]
PMIN-32MR-0.5M-34	20" [0.5m]
PMIN-32MR-1M-34	40" [1m]
PMIN-32MR-2M-34	79" [2m]
PMIN-32MR-3M-34	117" [3m]
PMIN-32MR-4M-34	157" [4m]
PMIN-32MR-5M-34	197" [5m]
PMIN-32MR-6M-34	236" [6m]
PMIN-32MR-8M-34	315" [8m]
PMIN-32MR-10M-34	393" [10m]

OTHER LENGTHS AVAILABLE
CONSULT FACTORY

MATERIALS	
SHELL:	BLACK PVC
CONTACTS:	GOLD PLATED COPPER ALLOY
WIRE:	
STYLE:	UL 1015
AWG:	12 AWG
JACKET:	PVC
VOLTAGE:	600V
INSERT:	BLACK PVC
GASKET:	BLACK TPE
NUT:	ZINC PLATED STEEL
RATINGS	
SCCR RATING:	65 kA Breakers and Fuses
RoHS COMPLIANT:	YES
PROTECTION:	IEC IP67
UL CATEGORY:	PVVA (US), PVVA7 (Canada)
U.S.:	UL 2237 LISTED, File E469485
CANADA:	C-UL 2237 LISTED, File E469485

CAUTION:

RISK OF ELECTRICAL SHOCK
DO NOT DISCONNECT UNDER LOAD

PROPRIETARY AND CONFIDENTIAL
THE INFORMATION CONTAINED IN THIS DRAWING IS THE SOLE PROPERTY OF MENCOM CORPORATION. ANY REPRODUCTION IN PART OR AS A WHOLE WITHOUT THE WRITTEN PERMISSION OF MENCOM CORPORATION IS PROHIBITED.

VOLTS	600V
AMPS	35A
TEMP:	-40°C TO 90°C

UNLESS OTHERWISE SPECIFIED:
DIMENSIONS ARE IN INCHES AND [MM]

MATERIAL

FINISH

DO NOT SCALE DRAWING

DRAWN BY	JJH
DRAWN DATE	02/16/2024
CHECKED BY	JJH
CHECK DATE	02/19/2024

COMMENTS:

MENCOM CORPORATION

TITLE:

3 PL MAL PMIN RCP 3/4 NPT 12AWG

SIZE	DWG. NO.	REV
B	PMIN-32MR-ZZ-34	C

SCALE: 3:2 WEIGHT: SHEET 1 OF 1