PIN #	WIRING	PIN #
1	-----	1
2	-----	2
3	-----	3
4	-----	4

REVISIONS			
REV.	DESCRIPTION	DATE	APPROVED
A	DRAWN IN SW	5/7/2014	BEM

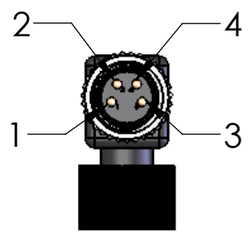

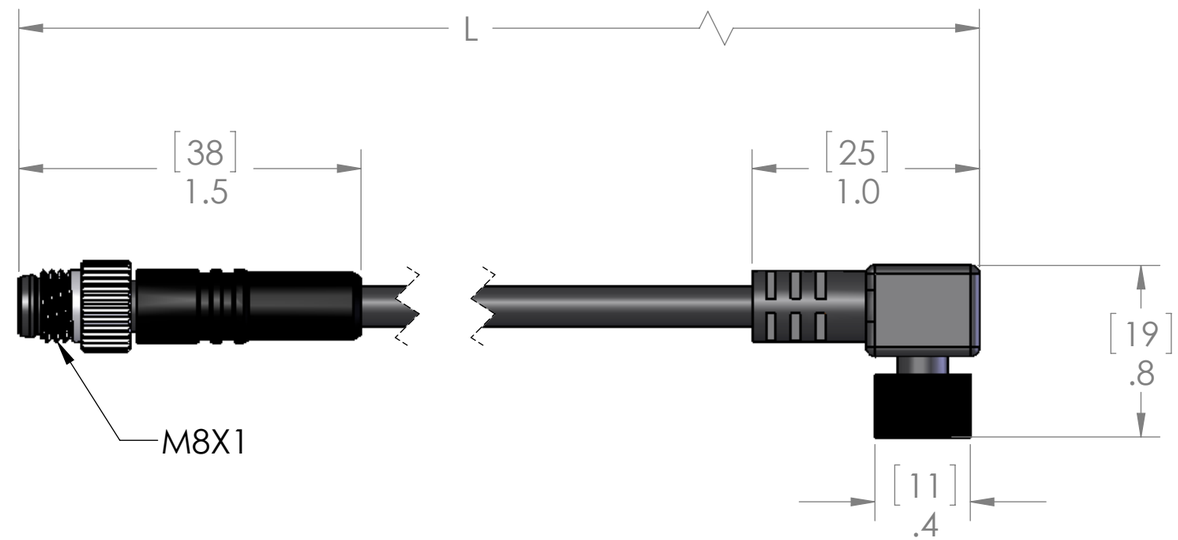

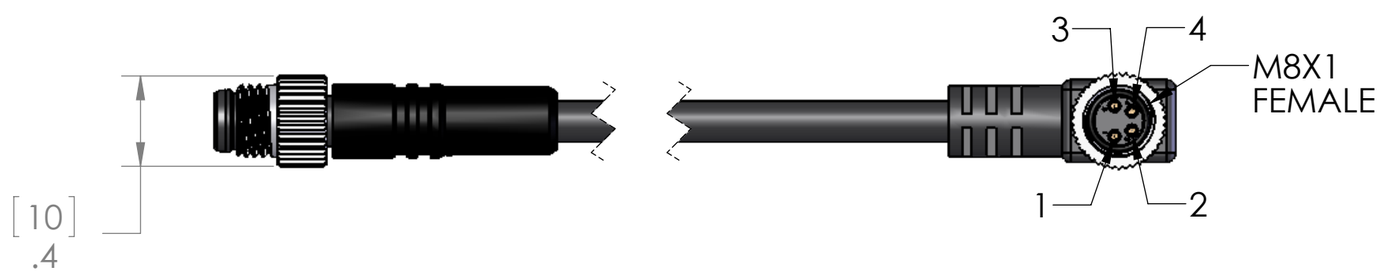

TABLE A		
P/N	L	STD?
NAN-T-4MFRP-1M	40" [1m]	YES
NAN-T-4MFRP-2M	79" [2m]	YES
NAN-T-4MFRP-3M	118" [3m]	NO
NAN-T-4MFRP-4M	157" [4m]	NO
NAN-T-4MFRP-5M	197" [5m]	YES
NAN-T-4MFRP-6M	236" [6m]	NO
NAN-T-4MFRP-8M	315" [8m]	NO
NAN-T-4MFRP-10M	393" [10m]	YES
NAN-T-4MFRP-15M	590" [15m]	NO
NAN-T-4MFRP-20M	786" [20m]	NO

PARTS LISTED AS NOT BEING STANDARD
MAY HAVE MINIMUM ORDER QUANTITIES

MATERIALS:	
BODIES:	BLACK PVC
CONTACTS:	GOLD PLATED COPPER ALLOY
CABLE:	24/4 BLACK PVC JACKET
COUPLING:	NICKEL PLATED BRASS
INSERT:	POLYAMIDE
O-RING:	FPM

PROPRIETARY AND CONFIDENTIAL
THE INFORMATION CONTAINED IN THIS DRAWING IS THE SOLE PROPERTY OF MENCOM CORPORATION. ANY REPRODUCTION IN PART OR AS A WHOLE WITHOUT THE WRITTEN PERMISSION OF MENCOM CORPORATION IS PROHIBITED.

VOLTS	60V
AMPS	3A
TEMP	105C
SPECIFICATIONS	

UNLESS OTHERWISE SPECIFIED:
DIMENSIONS ARE IN INCHES AND [MM]

MATERIAL

FINISH

DO NOT SCALE DRAWING

	NAME
DRAWN	JJH
CHECKED	
ENG APPR.	
MFG APPR.	
Q.A.	

COMMENTS:

MENCOM CORPORATION

TITLE:
4 PL M-F NAN EXT, FEM R/A

SIZE	DWG. NO.	REV
B	NAN-T-4MFRP-ZZ	A

SCALE: 3:2 | WEIGHT: | SHEET 1 OF 1