PIN #	COLOR
1	BROWN
2	WHITE
3	BLUE
4	BLACK

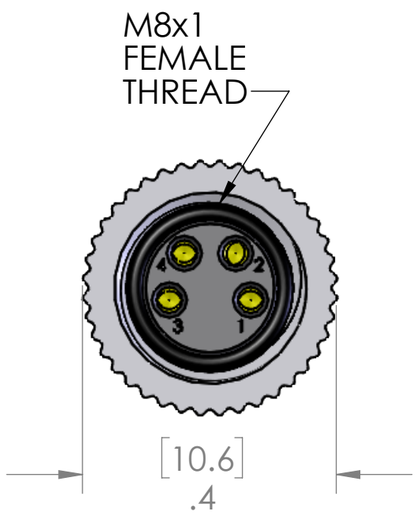

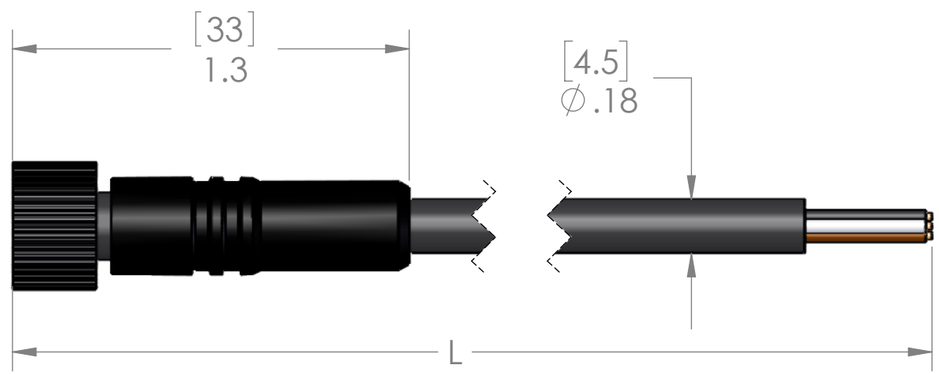

TABLE A		
P/N	L	STD?
NAN-T-4FP-0.5M	20" [0.5m]	NO
NAN-T-4FP-1M	40" [1m]	NO
NAN-T-4FP-2M	79" [2m]	YES
NAN-T-4FP-3M	118" [3m]	NO
NAN-T-4FP-4M	157" [4m]	NO
NAN-T-4FP-5M	197" [5m]	YES
NAN-T-4FP-6M	236" [6m]	NO
NAN-T-4FP-10M	393" [10m]	YES
NAN-T-4FP-15M	591" [15m]	YES

PARTS LISTED AS NOT BEING STANDARD
MAY HAVE MINIMUM ORDER QUANTITIES

MATERIALS	
BODY:	BLACK PVC
CONTACTS:	GOLD PLATED COPPER ALLOY
CABLE:	
STYLE:	AWM
AWG:	22 AWG
JACKET:	PVC
VOLTAGE:	300V
SHIELD:	NO
COUPLING:	NICKEL PLATED BRASS
INSERT:	POLYAMIDE
O-RING:	NBR
RATINGS	
PROTECTION CLASS:	IEC IP67

PROPRIETARY AND CONFIDENTIAL

THE INFORMATION CONTAINED IN THIS DRAWING IS THE SOLE PROPERTY OF MENCOM CORPORATION. ANY REPRODUCTION IN PART OR AS A WHOLE WITHOUT THE WRITTEN PERMISSION OF MENCOM CORPORATION IS PROHIBITED.

VOLTS	60V
AMPS	3A
TEMP:	70°C

UNLESS OTHERWISE SPECIFIED:

DIMENSIONS ARE IN INCHES AND [MM]

MATERIAL

FINISH

DO NOT SCALE DRAWING

DRAWN BY	ADM
DRAWN DATE	01/24/2024
CHECKED BY	RP
CHECK DATE	01/24/2024

COMMENTS:

MENCOM CORPORATION

TITLE:

SIZE	DWG. NO.	REV
B	NAN-T-4FP-ZZ	D

SCALE: 2:1 WEIGHT: SHEET 1 OF 1