PIN #	COLOR
1	BROWN
2	NOT PRESENT
3	BLUE
4	BLACK

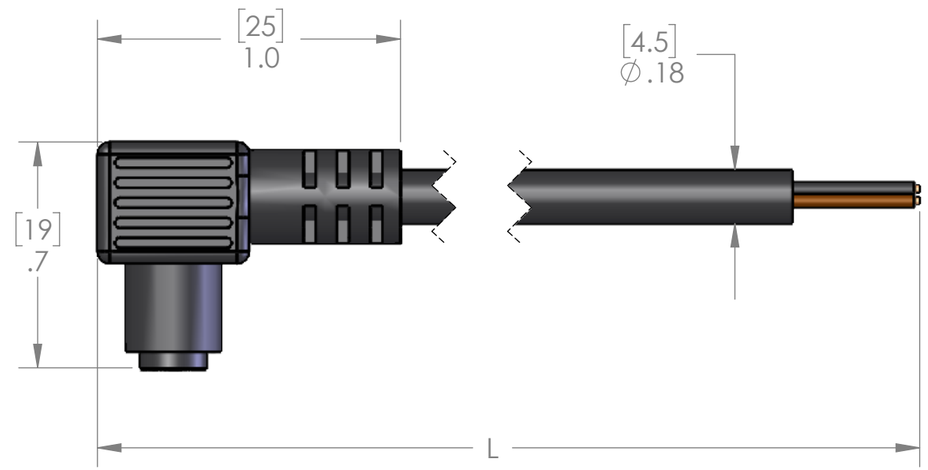

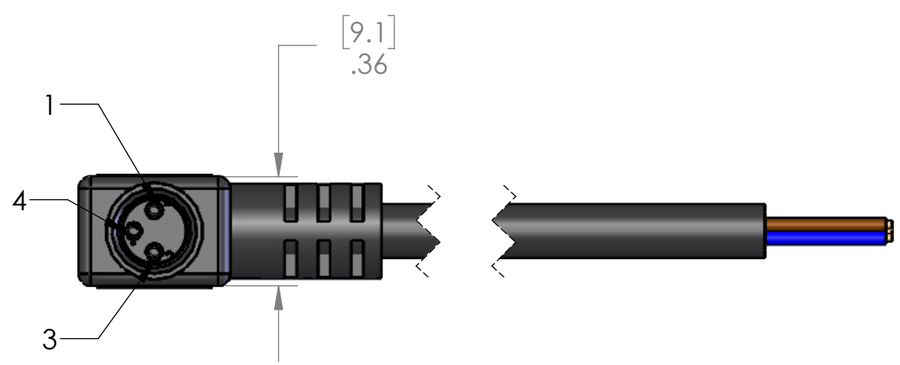

TABLE A		
P/N	L	STD?
NAN-3FP-0.3M-R	12" [0.3M]	NO
NAN-3FP-0.5M-R	19" [0.5M]	NO
NAN-3FP-1M-R	40" [1M]	NO
NAN-3FP-1.5M-R	59" [1.5M]	NO
NAN-3FP-2M-R	79" [2M]	YES
NAN-3FP-3M-R	118" [3M]	NO
NAN-3FP-4M-R	157" [4M]	NO
NAN-3FP-5M-R	197" [5M]	YES
NAN-3FP-6M-R	236" [6M]	NO
NAN-3FP-8M-R	315" [8M]	NO

PARTS LISTED AS NOT BEING STANDARD
MAY HAVE MINIMUM ORDER QUANTITIES

MATERIALS	
BODY:	BLACK PVC
CONTACTS:	GOLD PLATED COPPER ALLOY
CABLE:	
STYLE:	AWM
AWG:	22 AWG
JACKET:	BLACK PVC
VOLTAGE:	300V
SHIELD:	NO
COUPLING:	N/A
INSERT:	POLYAMIDE
O-RING:	NBR
RATINGS	
PROTECTION CLASS:	IEC IP67

PROPRIETARY AND CONFIDENTIAL

THE INFORMATION CONTAINED IN THIS DRAWING IS THE SOLE PROPERTY OF MENCOM CORPORATION. ANY REPRODUCTION IN PART OR AS A WHOLE WITHOUT THE WRITTEN PERMISSION OF MENCOM CORPORATION IS PROHIBITED.

VOLTS	60V
AMPS	3A
TEMP:	70°C

UNLESS OTHERWISE SPECIFIED:

DIMENSIONS ARE IN INCHES AND [MM]

MATERIAL

FINISH

DO NOT SCALE DRAWING

DRAWN BY	ADM
DRAWN DATE	01/26/2024
CHECKED BY	RP
CHECK DATE	01/26/2024

COMMENTS:

MENCOM CORPORATION

TITLE:

3 PL SNAP-LOCK R/A M8

SIZE	DWG. NO.	REV
B	NAN-3FP-ZZ-R	B

SCALE: 2:1 WEIGHT: SHEET 1 OF 1