PIN #	COLOR
A	WHITE
B	RED
C	GREEN/YELLOW
D	ORANGE
E	BLACK

REVISIONS			
REV.	DESCRIPTION	DATE	APPROVED
X	PRELIMINARY	1/13/2016	

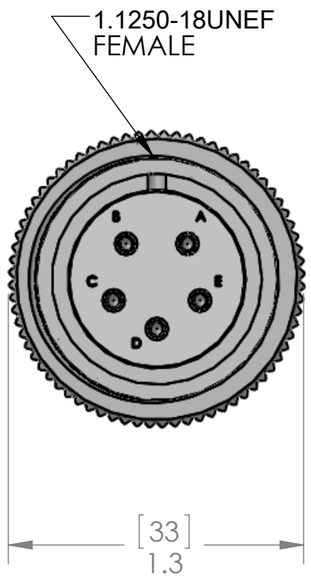

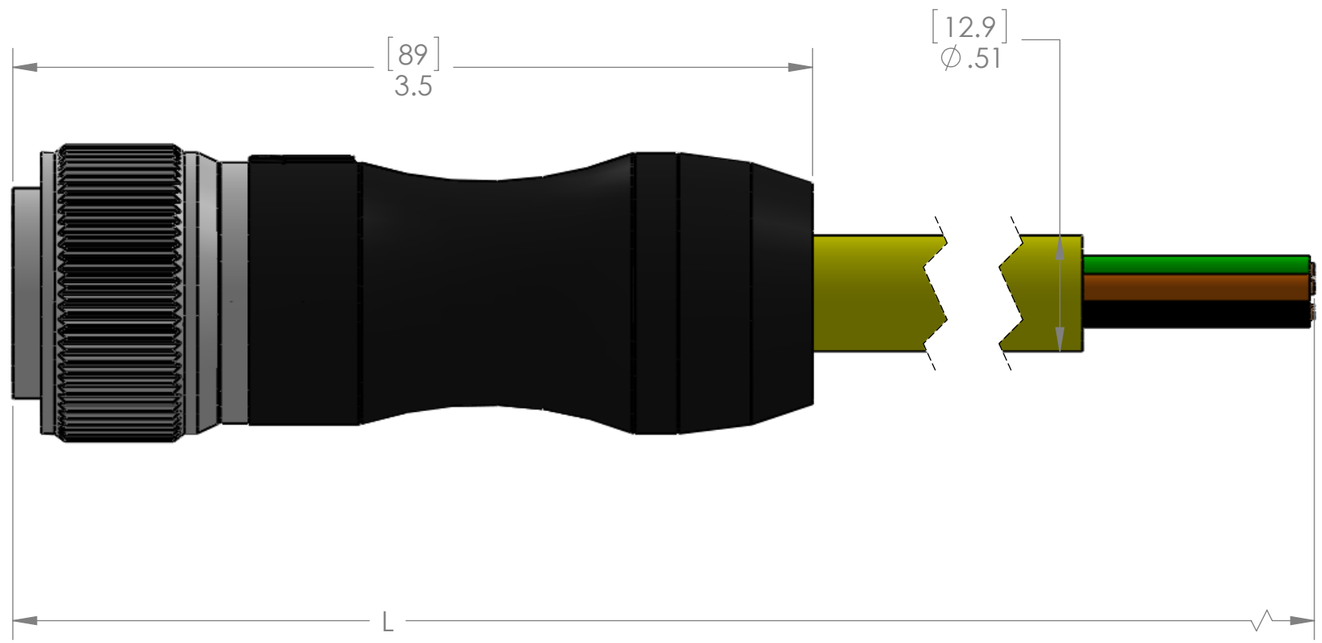

P/N	L
MS18-5AFP-1M	40" [1m]
MS18-5AFP-2M	79" [2m]
MS18-5AFP-3M	117" [3m]
MS18-5AFP-4M	157" [4m]
MS18-5AFP-5M	197" [5m]
MS18-5AFP-6M	236" [6m]
MS18-5AFP-8M	315" [8m]
MS18-5AFP-10M	393" [10m]
MS18-5AFP-15M	590" [15m]

MATERIALS	
SHELLS:	NICKEL PLATED ALUMINUM
CONTACTS:	SILVER PLATED COPPER ALLOY
OVERMOLD:	BLACK PVC
CABLE:	16/5 STOOW YELLOW PVC
GASKET:	TPE

PROPRIETARY AND CONFIDENTIAL

THE INFORMATION CONTAINED IN THIS DRAWING IS THE SOLE PROPERTY OF MENCOM CORPORATION. ANY REPRODUCTION IN PART OR AS A WHOLE WITHOUT THE WRITTEN PERMISSION OF MENCOM CORPORATION IS PROHIBITED.

SPECIFICATIONS	
VOLTS	600V
AMPS	13A
TEMP	105C

UNLESS OTHERWISE SPECIFIED:

DIMENSIONS ARE IN INCHES AND [MM]

MATERIAL

FINISH

DO NOT SCALE DRAWING

	NAME
DRAWN	JJH
CHECKED	
ENG APPR.	
MFG APPR.	
Q.A.	

COMMENTS:

MENCOM CORPORATION

TITLE:

5 PL FEM MS18 PLG -A

SIZE	DWG. NO.	REV
B	MS18-5AFP-ZZ	X

SCALE: 1.5:1 | WEIGHT: | SHEET 1 OF 1