PIN #	COLOR
A	GREEN/YELLOW
B	BLACK
C	WHITE

REVISIONS			
REV.	DESCRIPTION	DATE	APPROVED
X	PELIMINARY	1/8/2016	

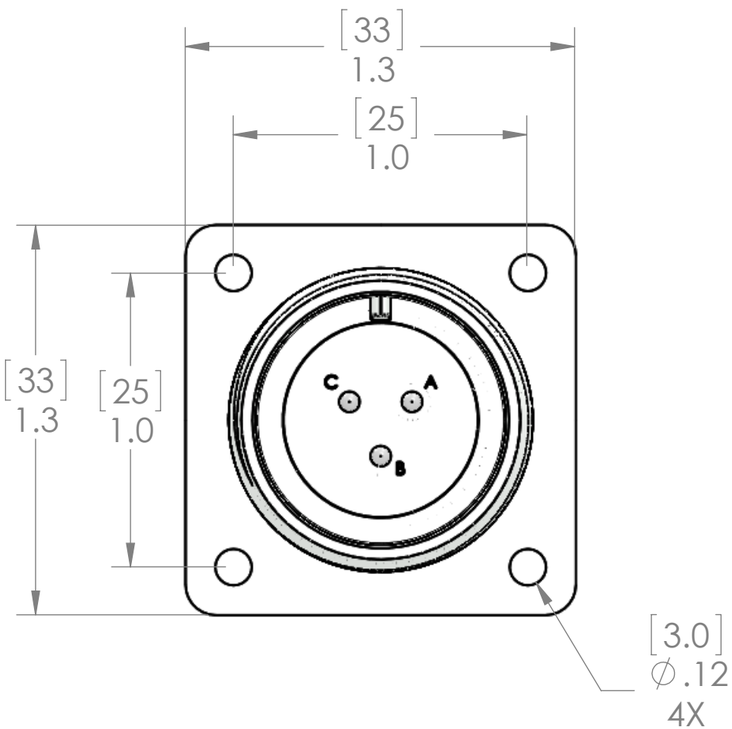

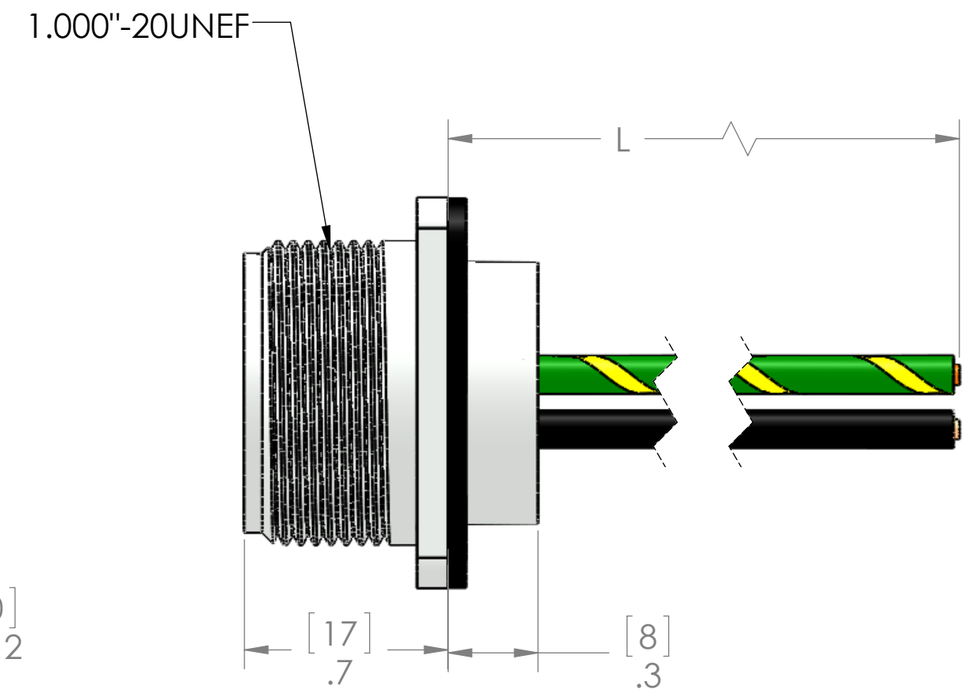

TABLE A	
P/N	L
MS16S-3BMR-0.3M-PM	12" [0.3M]
MS16S-3BMR-0.5M-PM	19" [0.5M]
MS16S-3BMR-1M-PM	40" [1M]
MS16S-3BMR-2M-PM	79" [2M]
MS16S-3BMR-5M-PM	197" [5M]
MS16S-3BMR-10M-PM	393" [10M]

MATERIALS	
SHELL:	NICKEL PLATED ZINC ALLOY
CONTACTS:	SILVER PLATED COPPER ALLOY
WIRES:	UL1015 16AWG
GASKET:	TPE

PROPRIETARY AND CONFIDENTIAL

THE INFORMATION CONTAINED IN THIS DRAWING IS THE SOLE PROPERTY OF MENCOM CORPORATION. ANY REPRODUCTION IN PART OR AS A WHOLE WITHOUT THE WRITTEN PERMISSION OF MENCOM CORPORATION IS PROHIBITED.

VOLTS	600V
AMPS	TBD
TEMP	105C
APPLICATION	

UNLESS OTHERWISE SPECIFIED:
DIMENSIONS ARE IN INCHES AND [MM]

INTERPRET GEOMETRIC TOLERANCING PER:
MATERIAL
FINISH
DO NOT SCALE DRAWING

	NAME
DRAWN	JJH
CHECKED	
ENG APPR.	
MFG APPR.	
Q.A.	

COMMENTS:

MENCOM CORPORATION

TITLE:

3 PL ML PM RCP MS16S -B

SIZE	DWG. NO.	REV
B	MS16S-3BMR-ZZ-PM	X

SCALE: 2:1 | WEIGHT: | SHEET 1 OF 1