PIN #	COLOR
1	WHITE
2	RED
3	GREEN / YELLOW
4	ORANGE
5	BLACK

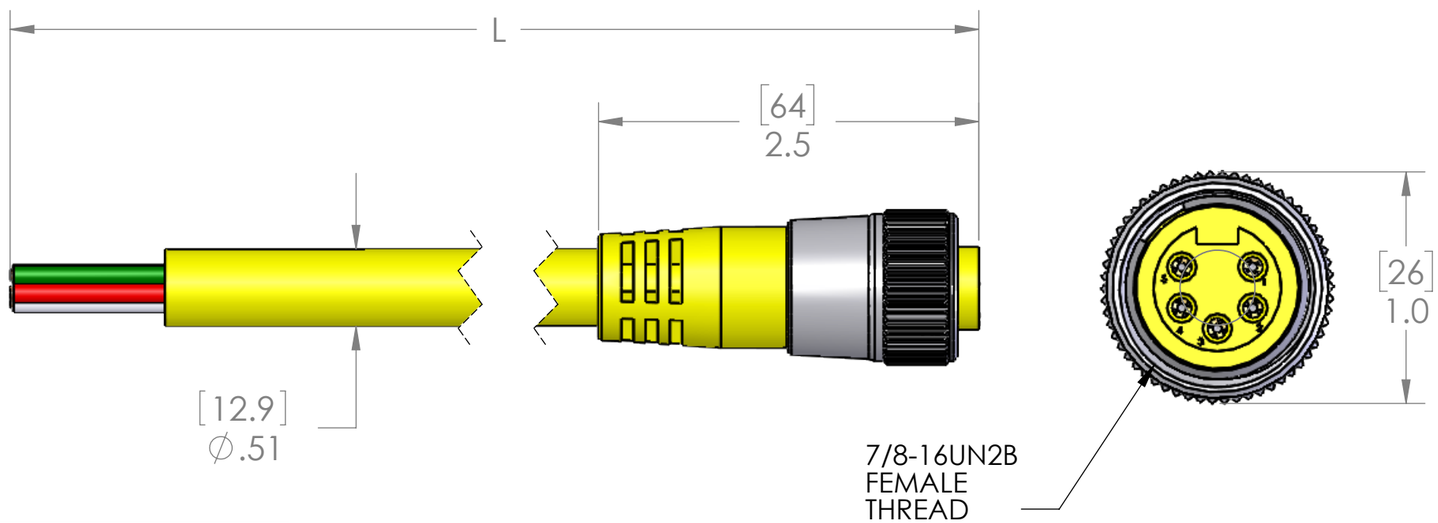

P/N	L	STD?
MINW-5FP-3	36" [0.9m]	YES
MINW-5FP-6	72" [1.8m]	YES
MINW-5FP-12	144" [3.7m]	YES
MINW-5FP-15	180" [4.6m]	NO
MINW-5FP-20	240" [6.1m]	YES
MINW-5FP-30	360" [9.1m]	YES
MINW-5FP-40	480" [12.2m]	NO
MINW-5FP-50	600" [15.2m]	NO
MINW-5FP-60	720" [18.3m]	NO
MINW-5FP-100	1200" [30.5m]	NO

PARTS LISTED AS BEING NOT STANDARD
MAY REQUIRE MINIMUM ORDERS

MATERIALS	
BODY:	YELLOW PVC
CONTACTS:	GOLD PLATED COPPER ALLOY
CABLE:	
STYLE:	SEOOW
AWG:	16 AWG
JACKET:	YELLOW TPE
VOLTAGE:	600V
SHIELD:	NO
COUPLING:	NICKEL PLATED BRASS
INSERT:	YELLOW PVC
O-RING:	N/A
APPROVALS	
US:	UL LISTED
CANADA:	C-UL LISTED
ROHS:	YES
CE & UKCA:	YES
RATINGS	
PROTECTION CLASS:	UL TYPE 4 & 12, IEC IP69

PROPRIETARY AND CONFIDENTIAL

THE INFORMATION CONTAINED IN THIS DRAWING IS THE SOLE PROPERTY OF MENCOM CORPORATION. ANY REPRODUCTION IN PART OR AS A WHOLE WITHOUT THE WRITTEN PERMISSION OF MENCOM CORPORATION IS PROHIBITED.

VOLTS	600V
AMPS	8A
TEMP:	105°C

UNLESS OTHERWISE SPECIFIED:

DIMENSIONS ARE IN INCHES AND [MM]

MATERIAL

FINISH

DO NOT SCALE DRAWING

DRAWN BY	ADM
DRAWN DATE	01/31/2024
CHECKED BY	JJH
CHECK DATE	01/31/2024

COMMENTS:

MENCOM CORPORATION

TITLE:

5 PL MIN FEM PLG,
SEOOW ZZ'

SIZE	DWG. NO.	REV
B	MINW-5FP-ZZ	B

SCALE: 1:1 WEIGHT: SHEET 1 OF 1