PIN #	COLOR
1	GREEN / YELLOW
2	BLACK
3	WHITE

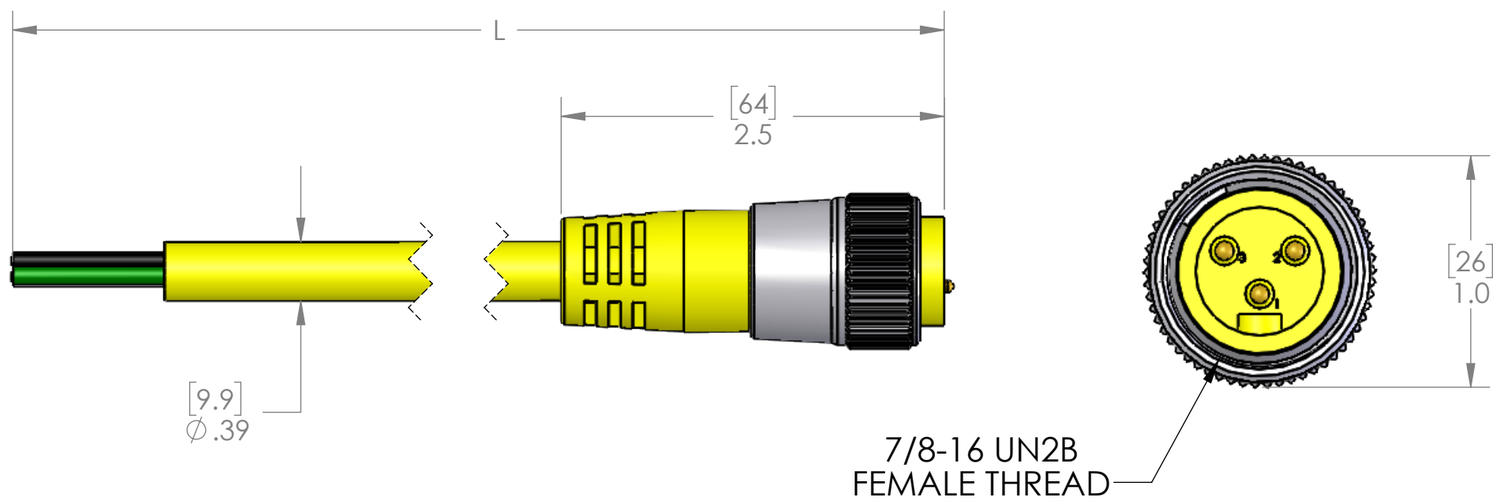

P/N	L	STD?
MINP-3MP-3	36" [0.9m]	YES
MINP-3MP-6	72" [1.8m]	YES
MINP-3MP-12	144" [3.7m]	YES
MINP-3MP-15	180" [4.6m]	NO
MINP-3MP-20	240" [6.1m]	YES
MINP-3MP-30	360" [9.1m]	YES
MINP-3MP-40	480" [12.2m]	NO
MINP-3MP-50	600" [15.2m]	NO
MINP-3MP-60	720" [18.3m]	NO
MINP-3MP-100	1200" [30.5m]	NO

PARTS LISTED AS NOT BEING STANDARD
MAY HAVE MINIMUM ORDER QUANTITIES

MATERIALS	
BODY:	YELLOW PUR
CONTACTS:	GOLD PLATED COPPER ALLOY
CABLE:	
STYLE:	AWM
AWG:	16 AWG
JACKET:	YELLOW PUR
VOLTAGE:	600V
SHIELD:	NO
COUPLING:	NICKEL PLATED BRASS
INSERT:	YELLOW PVC
O-RING:	N/A
APPROVALS	
US:	UL LISTED
CANADA:	C-UL LISTED
ROHS:	YES
CE & UKCA:	YES
RATINGS	
PROTECTION CLASS:	UL TYPE 4 & 12, IEC IP69

PROPRIETARY AND CONFIDENTIAL

THE INFORMATION CONTAINED IN THIS DRAWING IS THE SOLE PROPERTY OF MENCOM CORPORATION. ANY REPRODUCTION IN PART OR AS A WHOLE WITHOUT THE WRITTEN PERMISSION OF MENCOM CORPORATION IS PROHIBITED.

VOLTS	600V
AMPS	13A
TEMP:	80°C

UNLESS OTHERWISE SPECIFIED:

DIMENSIONS ARE IN INCHES AND [MM]

MATERIAL

FINISH

DO NOT SCALE DRAWING

DRAWN BY	ADM
DRAWN DATE	01/18/2024
CHECKED BY	JJH
CHECK DATE	01/29/2024

COMMENTS:

MENCOM CORPORATION

TITLE:

SIZE	DWG. NO.	REV
B	MINP-3MP-ZZ	C
SCALE: 1:2	WEIGHT:	SHEET 1 OF 1