PIN #	COLOR	AWG
1	GRAY / PINK	22
2	WHITE / GREEN	22
3	WHITE / YELLOW	22
4	BROWN	18
5	BROWN / YELLOW	22
6	BLUE	18
7	YELLOW	22
8	GREEN	22
9	PINK	22
10	WHITE	22
11	RED / BLUE	22
12	BROWN / GREEN	22
13	GRAY	22
14	RED	22

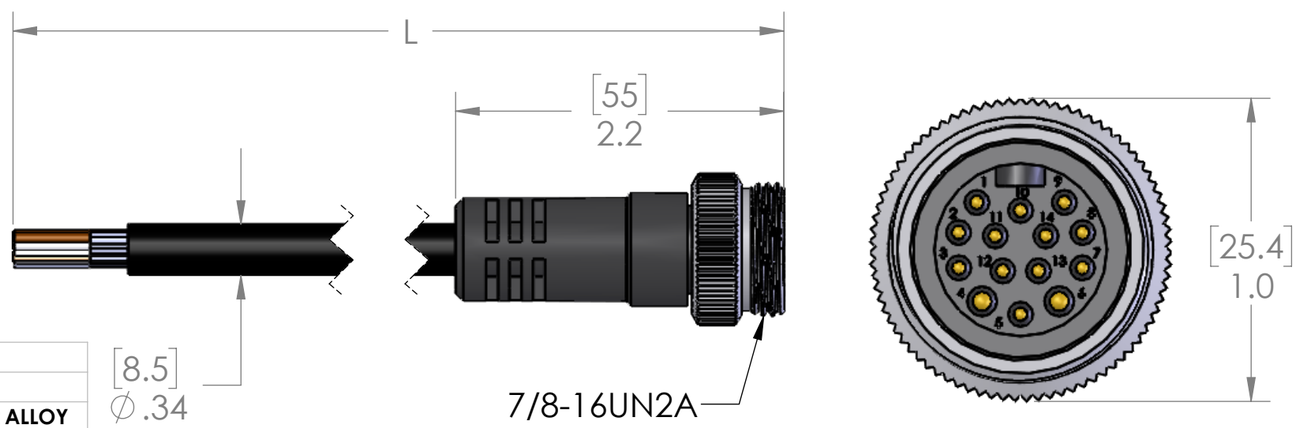

P/N	L	STD?
MINM-14MP-1M	40" [1m]	YES
MINM-14MP-2M	79" [2m]	YES
MINM-14MP-3M	118" [3m]	NO
MINM-14MP-4M	157" [4m]	NO
MINM-14MP-5M	197" [5m]	YES
MINM-14MP-6M	236" [6m]	NO
MINM-14MP-8M	315" [8m]	NO
MINM-14MP-10M	393" [10m]	YES
MINM-14MP-15M	590" [15m]	YES
MINM-14MP-20M	786" [20m]	NO

PARTS LISTED AS NOT BEING STANDARD
MAY HAVE MINIMUM ORDER QUANTITIES

MATERIALS	
BODY:	BLACK PVC
CONTACTS:	GOLD PLATED COPPER ALLOY
CABLE:	
STYLE:	AWM
AWG:	18 & 22 AWG
JACKET:	BLACK PVC
VOLTAGE:	600V
SHIELD:	MYLAR W/DRAIN
COUPLING:	NICKEL PLATED BRASS
INSERT:	BLACK POLYAMIDE
O-RING:	N/A
APPROVALS	
US:	UL LISTED
CANADA:	C-UL LISTED
ROHS:	YES
CE & UKCA:	YES
RATINGS	
PROTECTION CLASS:	UL TYPE 4 & 12, IEC IP69

PROPRIETARY AND CONFIDENTIAL

THE INFORMATION CONTAINED IN THIS DRAWING IS THE SOLE PROPERTY OF MENCOM CORPORATION. ANY REPRODUCTION IN PART OR AS A WHOLE WITHOUT THE WRITTEN PERMISSION OF MENCOM CORPORATION IS PROHIBITED.

VOLTS	300V
AMPS	6A/1A
TEMP:	105°C

UNLESS OTHERWISE SPECIFIED:
DIMENSIONS ARE IN INCHES AND [MM]

MATERIAL

FINISH

DO NOT SCALE DRAWING

DRAWN BY	JJH
DRAWN DATE	01/30/2024
CHECKED BY	JJH
CHECK DATE	01/30/2024

COMMENTS:

MENCOM CORPORATION

TITLE:

14 PL MIN MAL PLG

SIZE B | DWG. NO. MINM-14MP-ZZ | REV B

SCALE: 3:2 | WEIGHT: | SHEET 1 OF 1