MIN	WIRING	MDC
PIN #		PIN #
1	---------	4
2	---------	1
3	---------	3

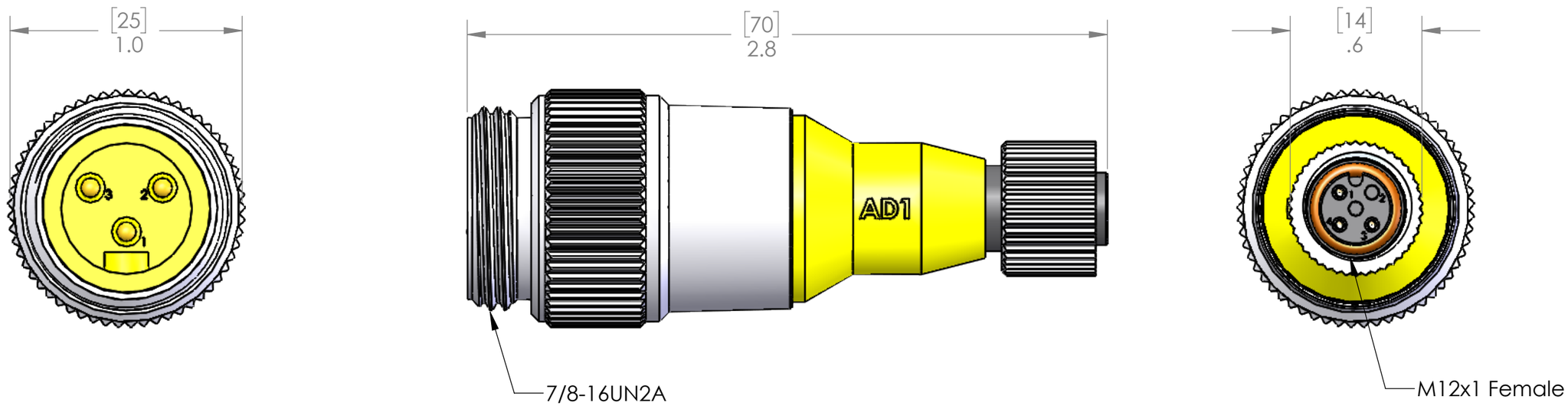

MATERIALS:	
BODY:	YELLOW PVC
COUPLINGS:	NICKEL PLATED BRASS
CONTACTS:	GOLD PLATED COPPER ALLOY
MDC INSULATOR:	POLYAMIDE
O-RING:	NBR

PROPRIETARY AND CONFIDENTIAL

THE INFORMATION CONTAINED IN THIS DRAWING IS THE SOLE PROPERTY OF MENCOM CORPORATION. ANY REPRODUCTION IN PART OR AS A WHOLE WITHOUT THE WRITTEN PERMISSION OF MENCOM CORPORATION IS PROHIBITED.

VOLTS	300V
AMPS	4A
TEMP:	105°C

UNLESS OTHERWISE SPECIFIED:

DIMENSIONS ARE IN INCHES AND [MM]

MATERIAL

FINISH

DO NOT SCALE DRAWING

DRAWN BY	ADM
DRAWN DATE	05/13/2019
CHECKED BY	JJH
CHECK DATE	05/13/2019

COMMENTS:

MENCOM CORPORATION

TITLE:

3 PL MIN TO MDC ADPTR

SIZE	DWG. NO.	REV
B	MINEDC-3MFP-AD1	B

SCALE: 2:1 WEIGHT: SHEET 1 OF 1