WIRING
1-1
2-2
3-3
4-4

REVISIONS			
REV.	DESCRIPTION	DATE	APPROVED
A	DRAWN IN SW	3/5/2014	

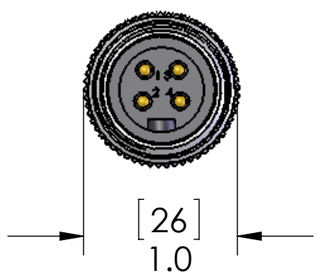

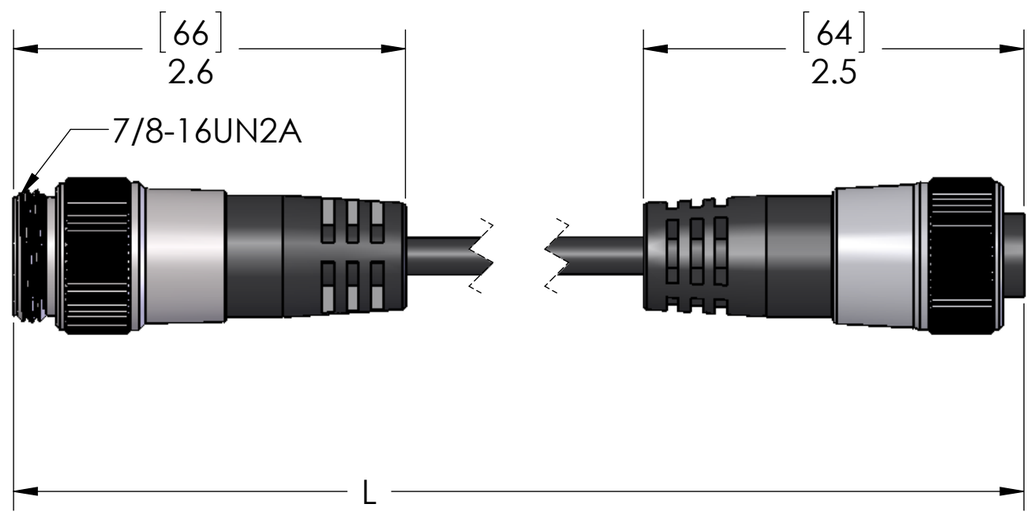

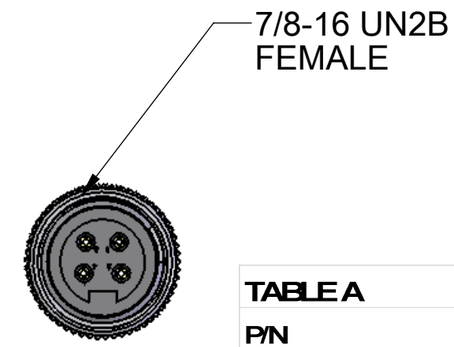

TABLE A		
P/N	L	STD?
MINCWF-4MFPX-1M-B	40" [1m]	YES
MINCWF-4MFPX-2M-B	79" [2m]	YES
MINCWF-4MFPX-3M-B	118" [3m]	NO
MINCWF-4MFPX-4M-B	157" [4m]	YES
MINCWF-4MFPX-5M-B	197" [5m]	YES
MINCWF-4MFPX-6M-B	236" [6m]	YES
MINCWF-4MFPX-8M-B	315" [8m]	NO
MINCWF-4MFPX-10M-B	393" [10m]	YES
MINCWF-4MFPX-15M-B	590" [15m]	YES
MINCWF-4MFPX-20M-B	786" [20m]	NO

PARTS LISTED AS NOT BEING STANDARD
MAY HAVE MINIMUM ORDERS REQUIRED

MATERIALS	
BODY:	BLACK TPE
INSERT:	BLACK TPE
CONTACTS:	GOLD PLATED COPPER ALLOY
CABLE:	18/4 CONTINUOUS FLEX EURO CC BLACK TPE JACKET. 10MM FLEXES, MIN BEND RADIUS IS 10x CABLE OD
COUPLING:	NICKEL PLATED BRASS

CERTIFICATIONS:	
US:	UL LISTED
CANADA:	C-UL LISTED

PROPRIETARY AND CONFIDENTIAL
THE INFORMATION CONTAINED IN THIS DRAWING IS THE SOLE PROPERTY OF MENCOM CORPORATION. ANY REPRODUCTION IN PART OR AS A WHOLE WITHOUT THE WRITTEN PERMISSION OF MENCOM CORPORATION IS PROHIBITED.

VOLTS	300V
AMPS	5.5A
TEMP	90°C

SPECIFICATIONS

UNLESS OTHERWISE SPECIFIED:
DIMENSIONS ARE IN INCHES AND [MM]

MATERIAL

FINISH

DO NOT SCALE DRAWING

	NAME
DRAWN	JJH
CHECKED	
ENG APPR.	
MFG APPR.	
Q.A.	

COMMENTS:

MENCOM CORPORATION

TITLE:
4 PL HI FLX EURO M-F EXT PLG 18AWG

SIZE	DWG. NO.	REV
B	MINCWF-4MFPX-ZZ-B	A

SCALE: 1:1 | WEIGHT: | SHEET 1 OF 1