PIN #	COLOR
1	ORANGE
2	BLUE
3	WHITE w/BLACK
4	BLACK
5	WHITE
6	RED
7	GREEN / YELLOW
8	RED w/ BLACK

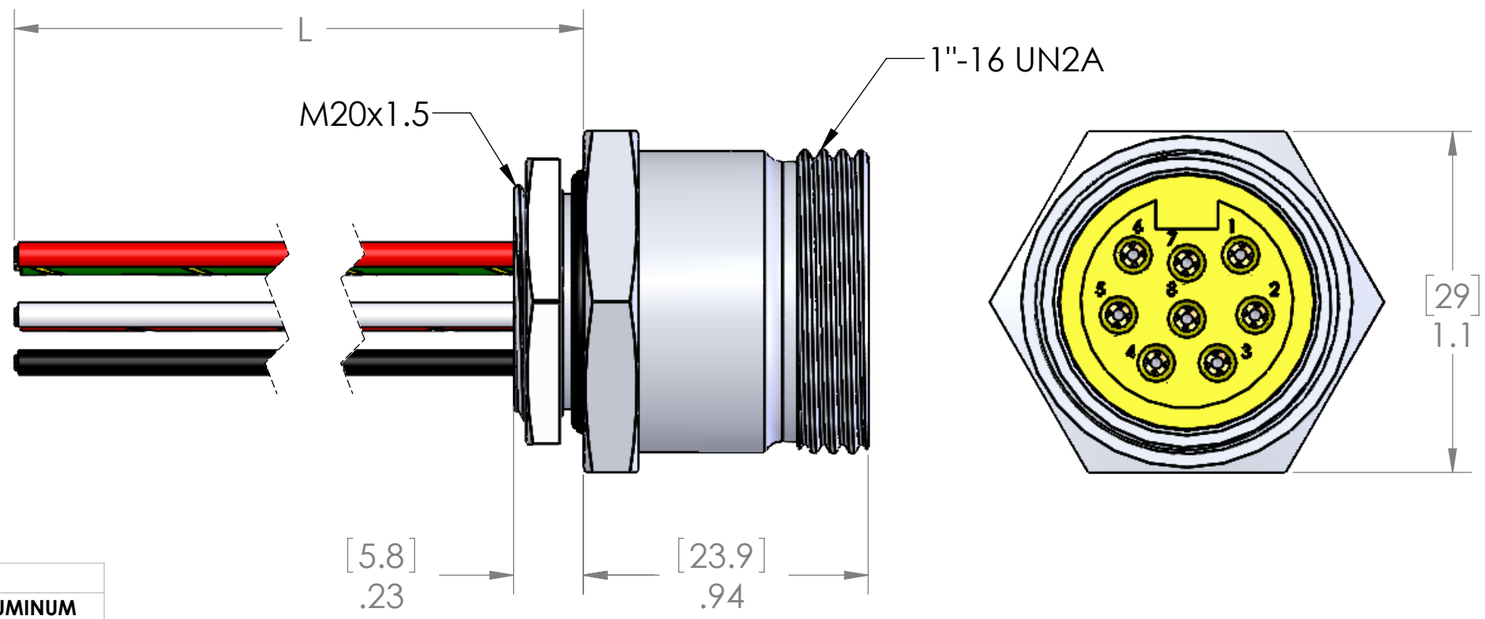

P/N	L
MIN-8FR2-1-18-M20	12" [0.3m]
MIN-8FR2-2-18-M20	24" [0.6m]
MIN-8FR2-3-18-M20	36" [0.9m]
MIN-8FR2-4-18-M20	48" [1.2m]
MIN-8FR2-5-18-M20	60" [1.5m]
MIN-8FR2-6-18-M20	72" [1.8m]
MIN-8FR2-10-18-M20	120" [3m]

PARTS LISTED AS NOT BEING STANDARD MAY REQUIRE MINIMUM ORDERS

MATERIALS	
SHELL:	CLEAR ANODIZED ALUMINUM
CONTACTS:	GOLD PLATED COPPER ALLOY
WIRES:	
STYLE:	UL 1007/1569
AWG:	18 AWG
JACKET:	PVC
VOLTAGE:	300V
INSERT:	YELLOW PVC
O-RING:	NBR
NUT:	NICKEL PLATED BRASS
APPROVALS	
US:	UL LISTED
CANADA:	C-UL LISTED
ROHS:	YES
CE & UKCA:	YES
RATINGS	
PROTECTION CLASS:	UL TYPE 4 & 12, IEC IP69

PROPRIETARY AND CONFIDENTIAL

THE INFORMATION CONTAINED IN THIS DRAWING IS THE SOLE PROPERTY OF MENCOM CORPORATION. ANY REPRODUCTION IN PART OR AS A WHOLE WITHOUT THE WRITTEN PERMISSION OF MENCOM CORPORATION IS PROHIBITED.

VOLTS	300V
AMPS	5A
TEMP:	105°C

UNLESS OTHERWISE SPECIFIED:

DIMENSIONS ARE IN INCHES AND [MM]

MATERIAL

FINISH

DO NOT SCALE DRAWING

DRAWN BY	ADM
DRAWN DATE	03/06/2024
CHECKED BY	JJH
CHECK DATE	03/07/2024

COMMENTS:

MENCOM CORPORATION

TITLE:

8 POL MIN RECP 1/2"

SIZE	DWG. NO.	REV
B	MIN-8FR2-ZZ-18-M20	B

SCALE: 2:1 WEIGHT: SHEET 1 OF 1