PIN #	COLOR
1	WHITE w/BLACK
2	BLACK
3	WHITE
4	RED
5	ORANGE
6	BLUE
7	GREEN / YELLOW

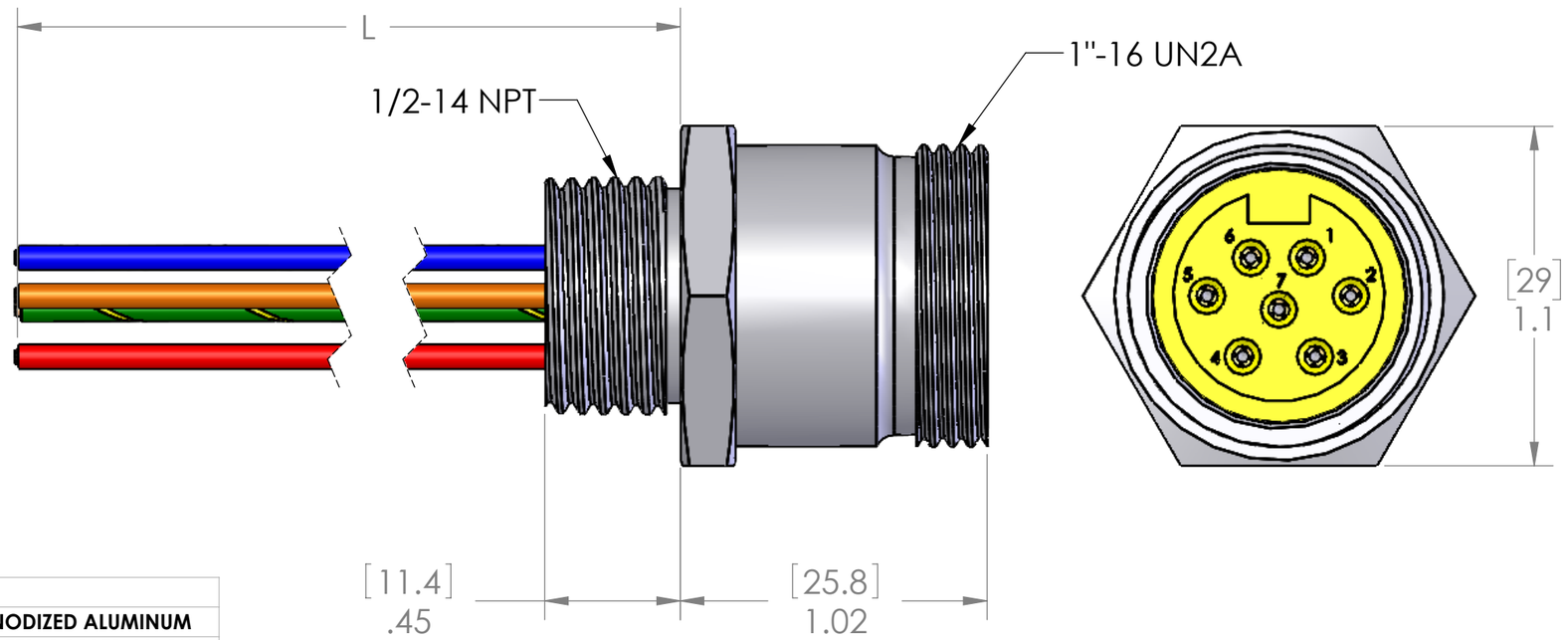

AN O-RING AND LOCKNUT ARE INCLUDED
ON LENGTHS OF 24" [0.6M] AND LONGER.

P/N	L
MIN-7FR2-1-18	12" [0.3m]
MIN-7FR2-2-18	24" [0.6m]
MIN-7FR2-3-18	36" [0.9m]
MIN-7FR2-4-18	48" [1.2m]
MIN-7FR2-5-18	60" [1.5m]
MIN-7FR2-6-18	72" [1.8m]
MIN-7FR2-8-18	96" [2.4m]
MIN-7FR2-10-18	120" [3m]

OTHER LENGTHS ARE AVAILABLE
PLEASE CONSULT FACTORY

MATERIALS	
SHELL:	CLEAR ANODIZED ALUMINUM
CONTACTS:	GOLD PLATED COPPER ALLOY
WIRES:	
STYLE:	UL 1007/1569
AWG:	18 AWG
JACKET:	PVC
VOLTAGE:	300V
INSERT:	YELLOW PVC
O-RING:	NBR
NUT:	ZINC PLATED STEEL
APPROVALS	
US:	UL LISTED
CANADA:	C-UL LISTED
ROHS:	YES
CE & UKCA:	YES
RATINGS	
PROTECTION CLASS:	UL TYPE 4 & 12, IEC IP69

PROPRIETARY AND CONFIDENTIAL

THE INFORMATION CONTAINED IN THIS DRAWING IS THE SOLE PROPERTY OF MENCOM CORPORATION. ANY REPRODUCTION IN PART OR AS A WHOLE WITHOUT THE WRITTEN PERMISSION OF MENCOM CORPORATION IS PROHIBITED.

VOLTS	300V
AMPS	5A
TEMP:	105°C

UNLESS OTHERWISE SPECIFIED:
DIMENSIONS ARE IN INCHES AND [MM]

MATERIAL

FINISH

DO NOT SCALE DRAWING

DRAWN BY	ADM
DRAWN DATE	03/05/2024
CHECKED BY	JJH
CHECK DATE	03/06/2024

COMMENTS:

MENCOM CORPORATION

TITLE:

7 POL MIN RECP 1/2"

SIZE	DWG. NO.	REV
B	MIN-7FR2-ZZ-18	B

SCALE: 2:1 WEIGHT: SHEET 1 OF 1