PIN #	COLOR
1	ORANGE
2	BLUE
3	BLACK
4	WHITE
5	RED
6	GREEN / YELLOW

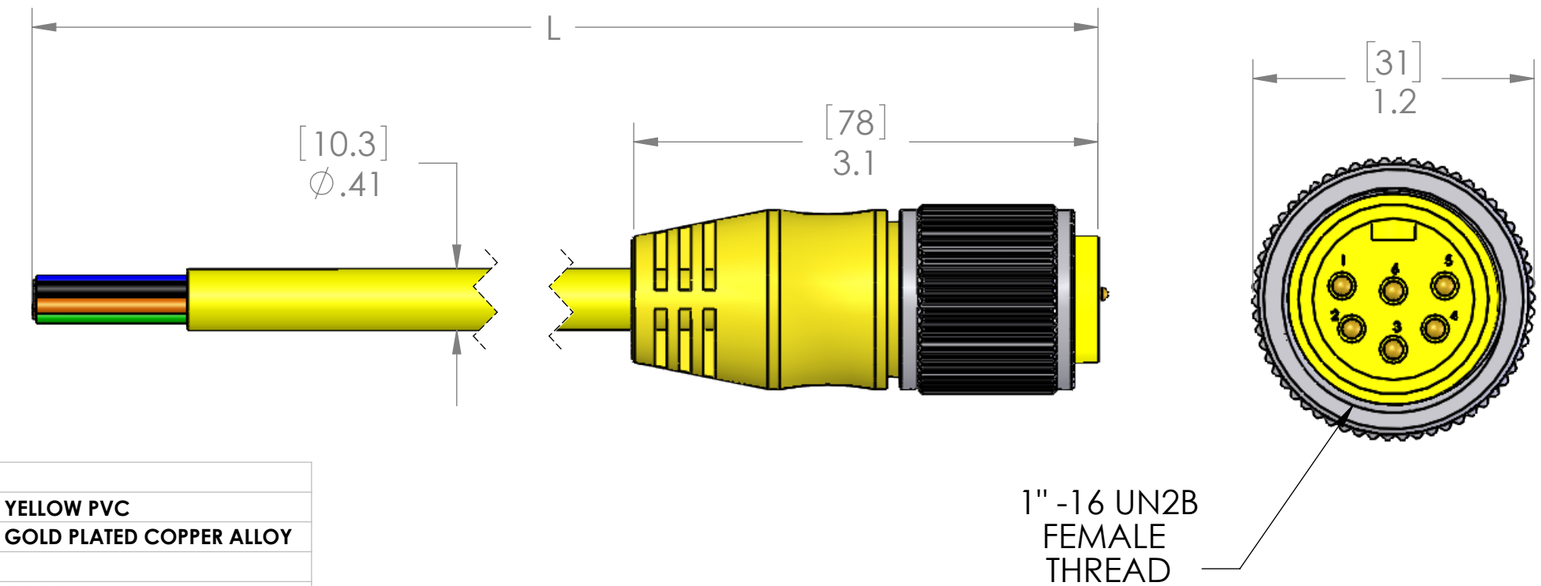

P/N	L	STD?
MIN-6MPX2-3	36" [0.9m]	YES
MIN-6MPX2-6	72" [1.8m]	YES
MIN-6MPX2-12	144" [3.7m]	YES
MIN-6MPX2-15	180" [4.6m]	NO
MIN-6MPX2-20	240" [6.1m]	YES
MIN-6MPX2-30	360" [9.1m]	YES
MIN-6MPX2-40	480" [12.2m]	NO
MIN-6MPX2-50	600" [15.2m]	NO
MIN-6MPX2-60	720" [18.3m]	NO
MIN-6MPX2-100	1200" [30.5m]	NO

PARTS LISTED AS NOT BEING STANDARD
MAY HAVE MINIMUM ORDER QUANTITIES

MATERIALS	
BODY:	YELLOW PVC
CONTACTS:	GOLD PLATED COPPER ALLOY
CABLE:	
STYLE:	SJTOOW
AWG:	18 AWG
JACKET:	YELLOW PVC
VOLTAGE:	300V
SHIELD:	NO
COUPLING:	NICKEL PLATED BRASS
INSERT:	YELLOW PVC
O-RING:	N/A
APPROVALS	
US:	UL LISTED
CANADA:	C-UL LISTED
ROHS:	YES
CE & UKCA:	YES
RATINGS	
PROTECTION CLASS:	UL TYPE 4 & 12, IEC IP69

PROPRIETARY AND CONFIDENTIAL
THE INFORMATION CONTAINED IN THIS DRAWING IS THE SOLE PROPERTY OF MENCOM CORPORATION. ANY REPRODUCTION IN PART OR AS A WHOLE WITHOUT THE WRITTEN PERMISSION OF MENCOM CORPORATION IS PROHIBITED.

VOLTS	300V
AMPS	5.5A
TEMP:	105°C

UNLESS OTHERWISE SPECIFIED:
DIMENSIONS ARE IN INCHES AND [MM]

MATERIAL
FINISH
DO NOT SCALE DRAWING

DRAWN BY	ADM
DRAWN DATE	03/04/2024
CHECKED BY	JJH
CHECK DATE	03/05/2024

COMMENTS:

MENCOM CORPORATION

TITLE:

SIZE	DWG. NO.	REV
B	MIN-6MPX2-ZZ	C
SCALE: 1:1	WEIGHT:	SHEET 1 OF 1