PIN #	COLOR
1	WHITE
2	RED
3	GREEN / YELLOW
4	ORANGE
5	BLACK
6	BLUE

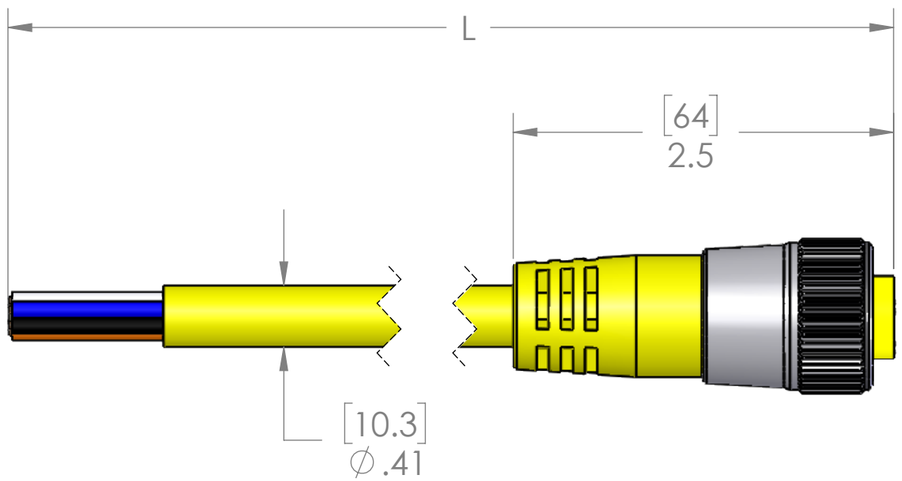

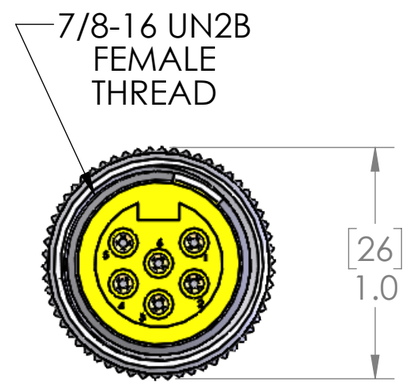

P/N	L	STD?
MIN-6FPX-2	24" [0.6m]	NO
MIN-6FPX-3	36" [0.9m]	YES
MIN-6FPX-6	72" [1.8m]	YES
MIN-6FPX-12	144" [3.7m]	YES
MIN-6FPX-15	180" [4.6m]	NO
MIN-6FPX-20	240" [6.1m]	YES
MIN-6FPX-30	360" [9.1m]	YES
MIN-6FPX-40	480" [12.2m]	NO
MIN-6FPX-50	600" [15.2m]	YES
MIN-6FPX-60	720" [18.3m]	NO

PARTS LISTED AS BEING NOT STANDARD
MAY REQUIRE MINIMUM ORDERS

MATERIALS	
BODY:	YELLOW PVC
CONTACTS:	GOLD PLATED COPPER ALLOY
CABLE:	
STYLE:	SJTOOW
AWG:	18 AWG
JACKET:	YELLOW PVC
VOLTAGE:	300V
SHIELD:	NO
COUPLING:	NICKEL PLATED BRASS
INSERT:	YELLOW PVC
O-RING:	N/A
APPROVALS	
US:	UL LISTED
CANADA:	C-UL LISTED
ROHS:	YES
CE & UKCA:	YES
RATINGS	
PROTECTION CLASS:	UL TYPE 4 & 12, IEC IP69

PROPRIETARY AND CONFIDENTIAL

THE INFORMATION CONTAINED IN THIS DRAWING IS THE SOLE PROPERTY OF MENCOM CORPORATION. ANY REPRODUCTION IN PART OR AS A WHOLE WITHOUT THE WRITTEN PERMISSION OF MENCOM CORPORATION IS PROHIBITED.

VOLTS	300V
AMPS	5.5A
TEMP:	105°C

UNLESS OTHERWISE SPECIFIED:

DIMENSIONS ARE IN INCHES AND [MM]

MATERIAL

FINISH

DO NOT SCALE DRAWING

DRAWN BY	ADM
DRAWN DATE	01/15/2024
CHECKED BY	JJH
CHECK DATE	01/16/2024

COMMENTS:

MENCOM CORPORATION

TITLE:

6 PL MIN PLUG

SIZE	DWG. NO.	REV
B	MIN-6FPX-ZZ	C
SCALE: 1:1	WEIGHT:	SHEET 1 OF 1