PIN #	COLOR
1	WHITE
2	RED
3	GREEN / YELLOW
4	ORANGE
5	BLACK

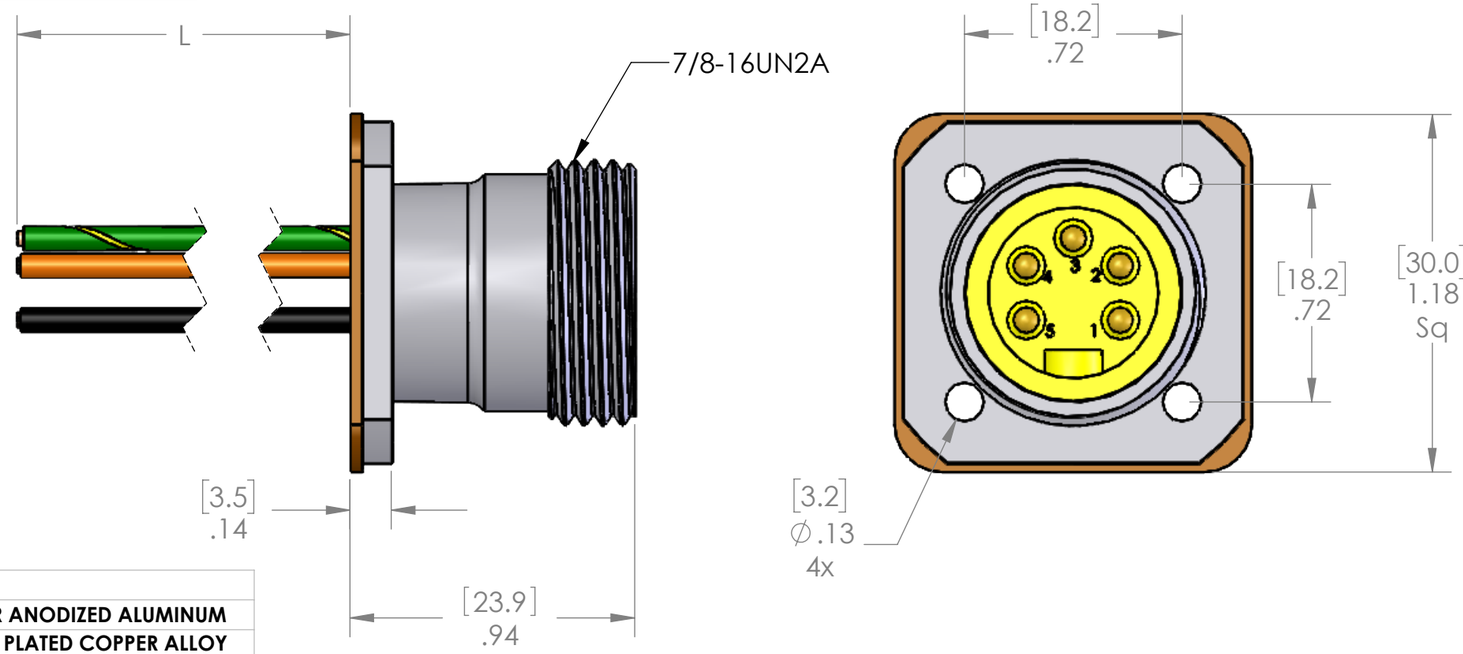

P/N	L
MIN-5MR-1-18-PM	12" [0.3m]
MIN-5MR-2-18-PM	24" [0.6m]
MIN-5MR-3-18-PM	36" [0.9m]
MIN-5MR-4-18-PM	48" [1.2m]
MIN-5MR-6-18-PM	72" [1.8m]
MIN-5MR-10-18-PM	120" [3.1m]
MIN-5MR-15-18-PM	180" [4.6m]
MIN-5MR-20-18-PM	240" [6.1m]

OTHER LENGTHS ARE AVAILABLE
PLEASE CONSULT FACTORY

MATERIALS	
SHELL:	CLEAR ANODIZED ALUMINUM
CONTACTS:	GOLD PLATED COPPER ALLOY
WIRES:	
STYLE:	UL 1007/1569
AWG:	18 AWG
JACKET:	PVC
VOLTAGE:	300V
INSERT:	YELLOW PVC
GASKET:	NBR
NUT:	N/A
APPROVALS	
US:	UL LISTED
CANADA:	C-UL LISTED
ROHS:	YES
CE & UKCA:	YES
RATINGS	
PROTECTION CLASS:	UL TYPE 4 & 12, IEC IP69

PROPRIETARY AND CONFIDENTIAL

THE INFORMATION CONTAINED IN THIS DRAWING IS THE SOLE PROPERTY OF MENCOM CORPORATION. ANY REPRODUCTION IN PART OR AS A WHOLE WITHOUT THE WRITTEN PERMISSION OF MENCOM CORPORATION IS PROHIBITED.

VOLTS	300V
AMPS	5.5A
TEMP:	105°C

UNLESS OTHERWISE SPECIFIED:

DIMENSIONS ARE IN INCHES AND [MM]

MATERIAL

FINISH

DO NOT SCALE DRAWING

DRAWN BY	ADM
DRAWN DATE	01/11/2024
CHECKED BY	JJH
CHECK DATE	01/12/2024

COMMENTS:

MENCOM CORPORATION

TITLE:

SIZE	DWG. NO.	REV
B	MIN-5MR-ZZ-18-PM	B

SCALE: 2:1 WEIGHT: SHEET 1 OF 1