REVISIONS			
REV.	DESCRIPTION	DATE	APPROVED
A	REDRAWN IN SW	8/15/2006	

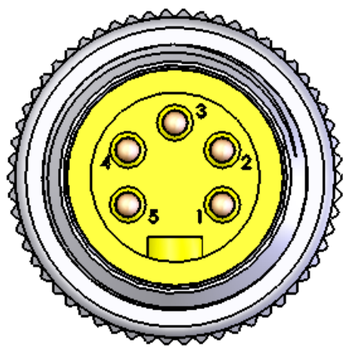

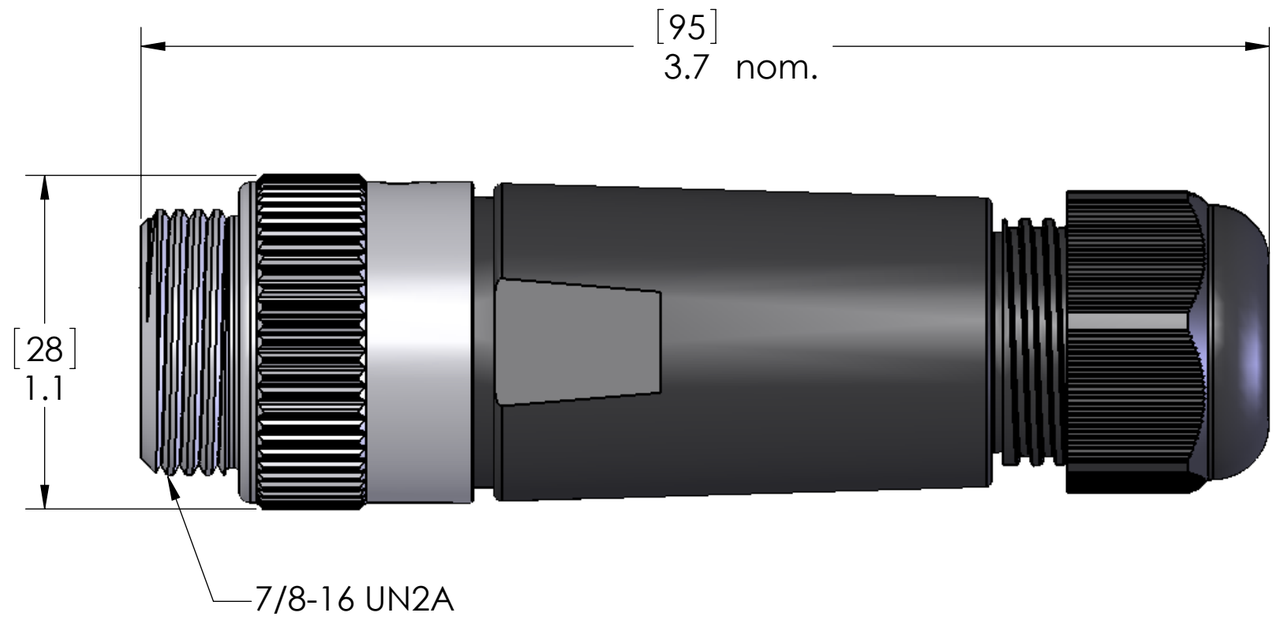

MATERIALS	
BODY:	**BLACK POLYAMIDE**
CONTACTS:	**GOLD PLATED COPPER ALLOY**
CABLE SEAL:	**NBR**
INSERT:	**YELLOW PVC**
COUPLING:	**NICKEL PLATED BRASS**
RATINGS	
AMPS:	**14AWG - 12A max**
	16AWG - 8A max
	18AWG - 5.5A max
	20-22AWG - 4A max
VOLTS:	**600V MAX**
SEAL:	**IP67**
CABLE RANGE:	**14AWG - 22AWG**
	0.20" - 0.51" (5mm - 13mm) OD
APPROVALS	
US:	**UL LISTED**
CANADA:	**C-UL LISTED**

Voltage rating is 600V or the rating of the cable, whichever is less.

Connections made via screw terminal

PROPRIETARY AND CONFIDENTIAL

THE INFORMATION CONTAINED IN THIS DRAWING IS THE SOLE PROPERTY OF MENCOM CORPORATION. ANY REPRODUCTION IN PART OR AS A WHOLE WITHOUT THE WRITTEN PERMISSION OF MENCOM CORPORATION IS PROHIBITED.

UNLESS OTHERWISE SPECIFIED:

DIMENSIONS ARE IN INCHES AND [MM]

MATERIAL

FINISH

DO NOT SCALE DRAWING

	NAME
DRAWN	BEM
CHECKED	
ENG APPR.	
MFG APPR.	
Q.A.	

COMMENTS:

MENCOM CORPORATION

TITLE:

SIZE B | DWG. NO. MIN-5MPM-FW | REV A

SCALE: 2:1 | WEIGHT: | SHEET 1 OF 1