| PIN # | COLOR |
|---|---|
| | |
| 1 | GREEN / YELLOW |
| 2 | RED w/BLACK |
| 3 | RED w/WHITE |

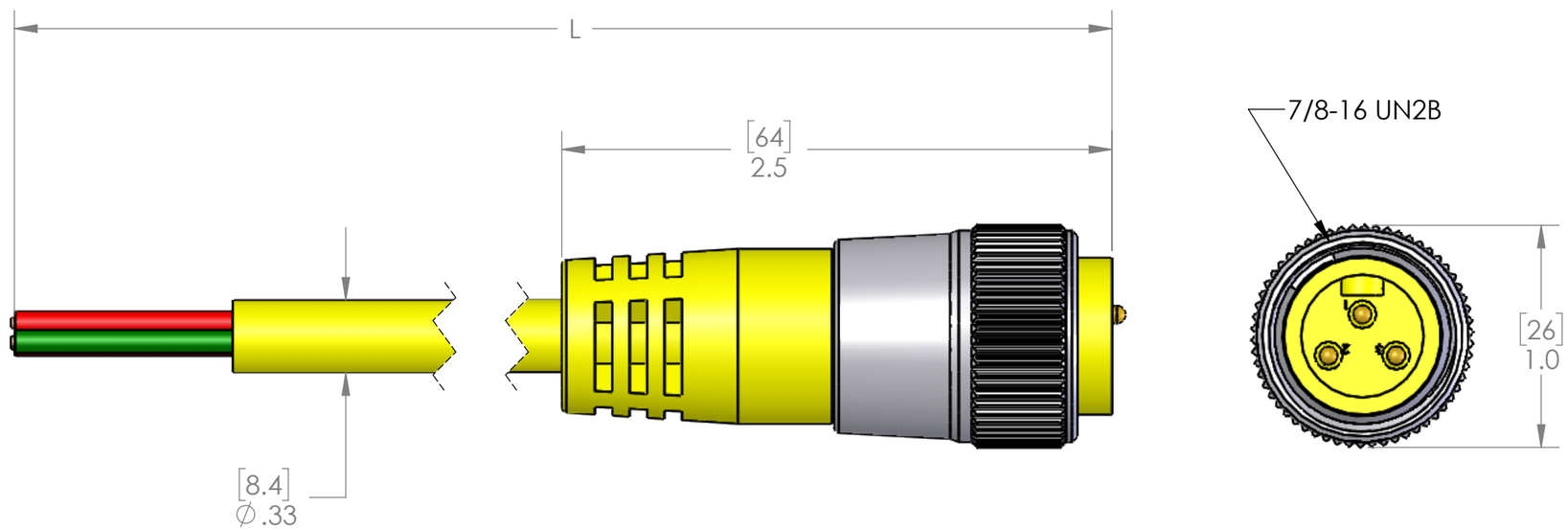


| P/N | L | STD? |
|---|---|---|
| | | |
| MIN-3MPX-3A | 36" [0.9m] | YES |
| MIN-3MPX-6A | 72" [1.8m] | YES |
| MIN-3MPX-12A | 144" [3.7m] | YES |
| MIN-3MPX-15A | 180" [4.6m] | NO |
| MIN-3MPX-20A | 240" [6.1m] | YES |
| MIN-3MPX-30A | 360" [9.1m] | YES |
| MIN-3MPX-40A | 480" [12.2m] | NO |
| MIN-3MPX-50A | 600" [15.2m] | YES |
| MIN-3MPX-60A | 720" [18.3m] | NO |
| MIN-3MPX-100A | 1200" [30.5m] | NO |

PARTS LISTED AS NOT BEING STANDARD
MAY HAVE MINIMUM ORDER QUANTITIES

| | |
|---|---|
| MATERIALS | |
| BODY: | YELLOW PVC |
| CONTACTS: | GOLD PLATED COPPER ALLOY |
| CABLE: | |
| STYLE: | SJTOOW |
| AWG: | 18 AWG |
| JACKET: | YELLOW PVC |
| VOLTAGE: | 300V |
| SHIELD: | NO |
| COUPLING: | NICKEL PLATED BRASS |
| INSERT: | YELLOW PVC |
| O-RING: | N/A |
| | |
| APPROVALS | |
| US: | UL LISTED |
| CANADA: | C-UL LISTED |
| ROHS: | YES |
| CE & UKCA: | YES |
| | |
| RATINGS | |
| PROTECTION CLASS: | UL TYPE 4 & 12, IEC IP69 |


**PROPRIETARY AND CONFIDENTIAL**

THE INFORMATION CONTAINED IN THIS DRAWING IS THE SOLE PROPERTY OF MENCOM CORPORATION. ANY REPRODUCTION IN PART OR AS A WHOLE WITHOUT THE WRITTEN PERMISSION OF MENCOM CORPORATION IS PROHIBITED.


| | |
|---|---|
| VOLTS | 300V |
| AMPS | 10A |
| TEMP: | 105°C |

UNLESS OTHERWISE SPECIFIED:

DIMENSIONS ARE IN INCHES AND [MM]

MATERIAL

FINISH

DO NOT SCALE DRAWING

| | |
|---|---|
| DRAWN BY | ADM |
| DRAWN DATE | 09/20/2023 |
| CHECKED BY | JJH |
| CHECK DATE | 10/09/2023 |

COMMENTS:

MENCOM CORPORATION

TITLE:

SIZE B | DWG. NO. MIN-3MPX-ZZA | REV D

SCALE: 3:2 | WEIGHT: | SHEET 1 OF 1