PIN #	COLOR
1	GREEN / YELLOW
2	RED w/BLACK
3	RED w/WHITE

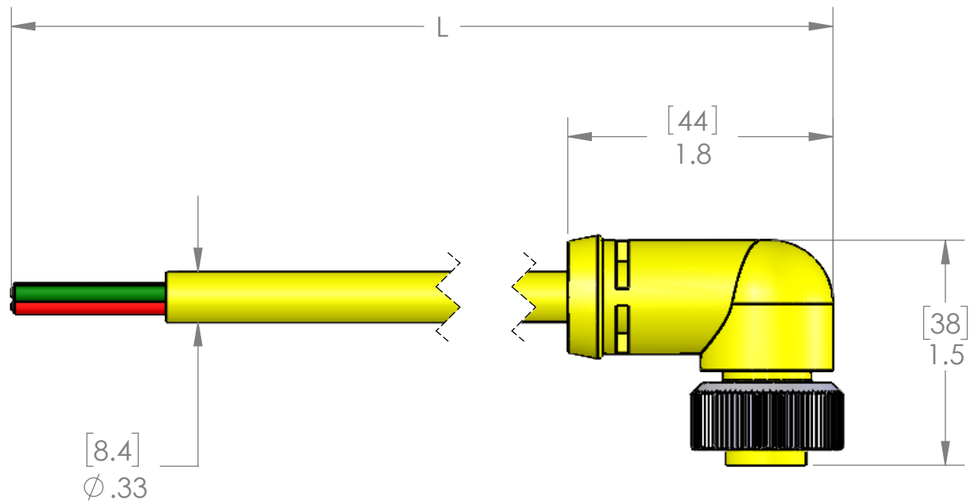

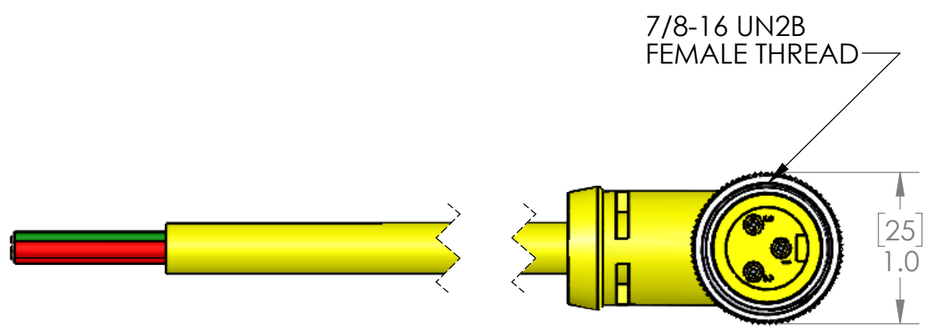

P/N	L	STD?
MIN-3FPX-3A-R	36" [0.9m]	YES
MIN-3FPX-6A-R	72" [1.8m]	YES
MIN-3FPX-12A-R	144" [3.7m]	YES
MIN-3FPX-15A-R	180" [4.6m]	NO
MIN-3FPX-20A-R	240" [6.1m]	YES
MIN-3FPX-30A-R	360" [9.1m]	YES
MIN-3FPX-40A-R	480" [12.2m]	NO
MIN-3FPX-50A-R	600" [15.2m]	YES
MIN-3FPX-60A-R	720" [18.3m]	NO
MIN-3FPX-100A-R	1200" [30.5m]	NO

PARTS LISTED AS NOT BEING STANDARD
MAY HAVE MINIMUM ORDER QUANTITIES

MATERIALS	
BODY:	YELLOW PVC
CONTACTS:	GOLD PLATED COPPER ALLOY
CABLE:	
STYLE:	AWM
AWG:	18 AWG
JACKET:	YELLOW PVC
VOLTAGE:	300V
SHIELD:	NO
COUPLING:	NICKEL PLATED BRASS
INSERT:	YELLOW PVC
O-RING:	N/A
APPROVALS	
US:	UL LISTED
CANADA:	C-UL LISTED
ROHS:	YES
CE & UKCA:	YES
RATINGS	
PROTECTION CLASS:	UL TYPE 4 & 12, IEC IP69

PROPRIETARY AND CONFIDENTIAL

THE INFORMATION CONTAINED IN THIS DRAWING IS THE SOLE PROPERTY OF MENCOM CORPORATION. ANY REPRODUCTION IN PART OR AS A WHOLE WITHOUT THE WRITTEN PERMISSION OF MENCOM CORPORATION IS PROHIBITED.

VOLTS	300V
AMPS	8A
TEMP:	105°C

UNLESS OTHERWISE SPECIFIED:

DIMENSIONS ARE IN INCHES AND [MM]

MATERIAL

FINISH

DO NOT SCALE DRAWING

DRAWN BY	ADM
DRAWN DATE	09/07/2023
CHECKED BY	JJH
CHECK DATE	11/01/2023

COMMENTS:

MENCOM CORPORATION

TITLE:

SIZE B | DWG. NO. MIN-3FPX-ZZA-R | REV B

SCALE: 1:1 | WEIGHT: | SHEET 1 OF 1