PIN #	COLOR
1	WHITE
2	BLACK

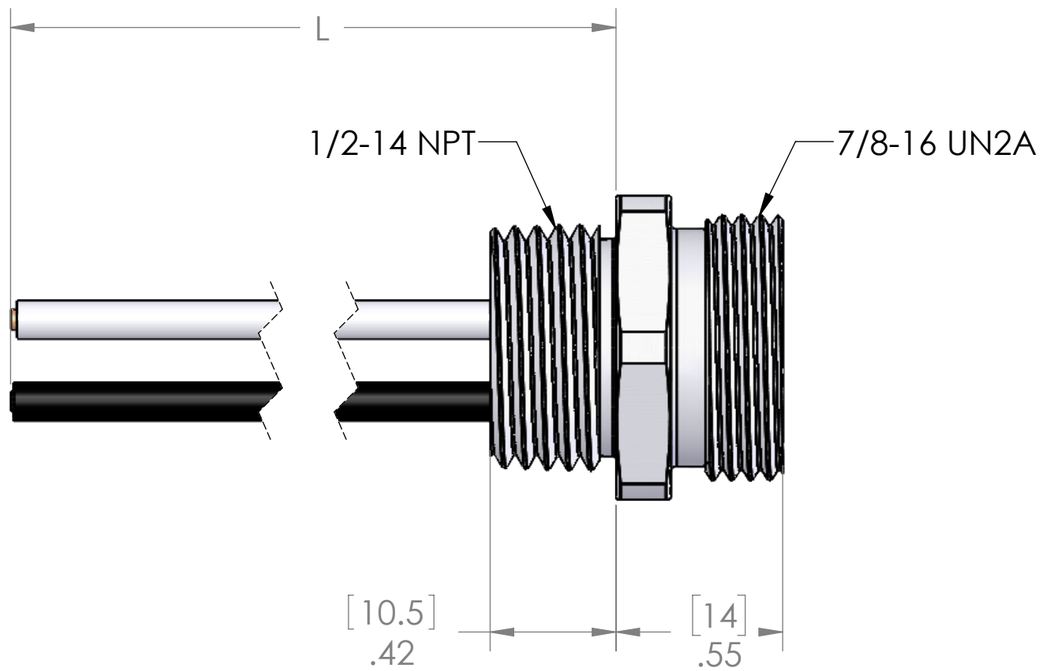

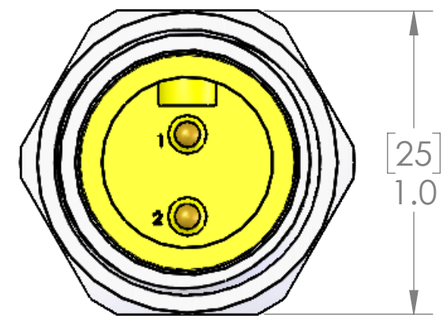

TABLE A	
P/N	L
MIN-2MR-1	12" [0.3M]
MIN-2MR-2	24" [0.6M]
MIN-2MR-3	36" [0.9M]
MIN-2MR-4	48" [1.2M]
MIN-2MR-6	72" [1.8M]
MIN-2MR-10	120" [3.1M]
MIN-2MR-15	180" [4.6M]

OTHER LENGTHS ARE AVAILABLE
PLEASE CONSULT FACTORY

AN O-RING AND LOCKNUT ARE INCLUDED
ON LENGTHS OF 24" [0.6M] AND LONGER.

MATERIALS	
SHELL:	CLEAR ANODIZED ALUMINUM
CONTACTS:	GOLD PLATED COPPER ALLOY
WIRES:	
STYLE:	UL 1015
AWG:	16 AWG
JACKET:	PVC
VOLTAGE:	600V
INSERT:	YELLOW PVC
O-RING:	NBR
NUT:	ZINC PLATED STEEL
APPROVALS	
US:	UL LISTED
CANADA:	C-UL LISTED
ROHS:	YES
CE & UKCA:	YES
RATINGS	
PROTECTION CLASS:	UL TYPE 4 & 12, IEC IP69

PROPRIETARY AND CONFIDENTIAL
THE INFORMATION CONTAINED IN THIS DRAWING IS THE SOLE PROPERTY OF MENCOM CORPORATION. ANY REPRODUCTION IN PART OR AS A WHOLE WITHOUT THE WRITTEN PERMISSION OF MENCOM CORPORATION IS PROHIBITED.

VOLTS	600V
AMPS	13A
TEMP:	105°C

UNLESS OTHERWISE SPECIFIED:
DIMENSIONS ARE IN INCHES AND [MM]

MATERIAL

FINISH

DO NOT SCALE DRAWING

DRAWN BY	ADM
DRAWN DATE	09/07/2023
CHECKED BY	JJH
CHECK DATE	10/09/2023

COMMENTS:

MENCOM CORPORATION

TITLE:
2 PL ML MIN RECP

SIZE	DWG. NO.	REV
B	MIN-2MR-ZZ	B

SCALE: 2:1 WEIGHT: SHEET 1 OF 1