PIN #	COLOR
1	WHITE
2	BLACK

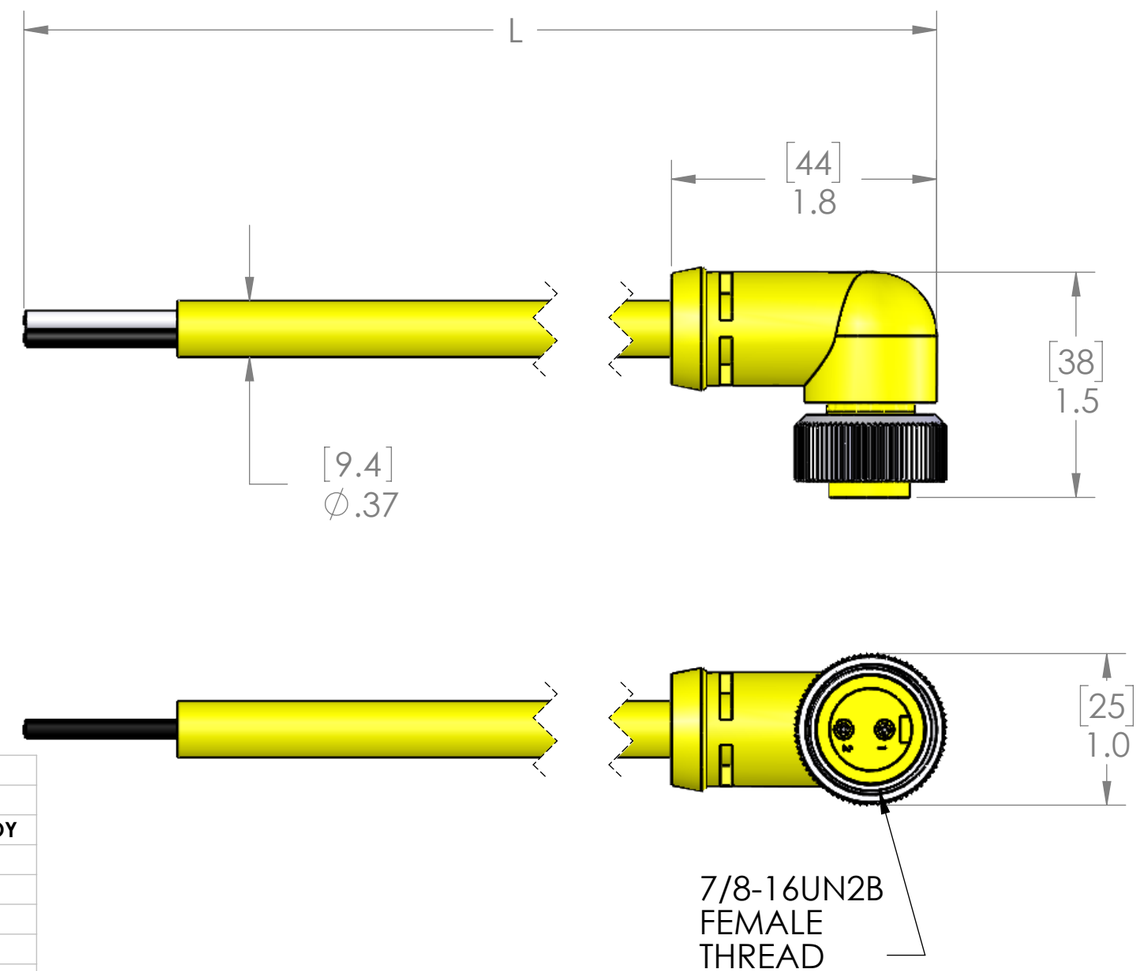

P/N	L	STD?
MIN-2FP-3-R	36" [0.9m]	YES
MIN-2FP-6-R	72" [1.8m]	YES
MIN-2FP-12-R	144" [3.7m]	YES
MIN-2FP-15-R	180" [4.6m]	NO
MIN-2FP-20-R	240" [6.1m]	YES
MIN-2FP-30-R	360" [9.1m]	YES
MIN-2FP-40-R	480" [12.2m]	NO
MIN-2FP-50-R	600" [15.2m]	NO
MIN-2FP-60-R	720" [18.3m]	NO
MIN-2FP-100-R	1200" [30.5m]	NO

PARTS LISTED AS NOT BEING STANDARD
MAY HAVE MINIMUM ORDER QUANTITIES

MATERIALS	
BODY:	YELLOW PVC
CONTACTS:	GOLD PLATED COPPER ALLOY
CABLE:	
STYLE:	STOOW
AWG:	16 AWG
JACKET:	YELLOW PVC
VOLTAGE:	600V
SHIELD:	NO
COUPLING:	NICKEL PLATED BRASS
INSERT:	YELLOW PVC
O-RING:	N/A
APPROVALS	
US:	UL LISTED
CANADA:	C-UL LISTED
ROHS:	YES
CE & UKCA:	YES
RATINGS	
PROTECTION CLASS:	UL TYPE 4 & 12, IEC IP69

PROPRIETARY AND CONFIDENTIAL

THE INFORMATION CONTAINED IN THIS DRAWING IS THE SOLE PROPERTY OF MENCOM CORPORATION. ANY REPRODUCTION IN PART OR AS A WHOLE WITHOUT THE WRITTEN PERMISSION OF MENCOM CORPORATION IS PROHIBITED.

VOLTS	600V
AMPS	13A
TEMP:	105°C

UNLESS OTHERWISE SPECIFIED:

DIMENSIONS ARE IN INCHES AND [MM]

MATERIAL

FINISH

DO NOT SCALE DRAWING

DRAWN BY	ADM
DRAWN DATE	09/05/2023
CHECKED BY	JJH
CHECK DATE	09/06/2023

COMMENTS:

MENCOM CORPORATION

TITLE:

SIZE	DWG. NO.	REV
B	MIN-2FP-ZZ-R	B

SCALE: 1:1 WEIGHT: SHEET 1 OF 1