PIN #	COLOR
1	ORANGE
2	BLUE
3	WHITE w/BLACK
4	RED w/BLACK
5	GREEN w/BLACK
6	ORANGE w/BLACK
7	BLUE w/BLACK
8	BLACK w/WHITE
9	GREEN / YELLOW
10	RED
11	WHITE
12	BLACK

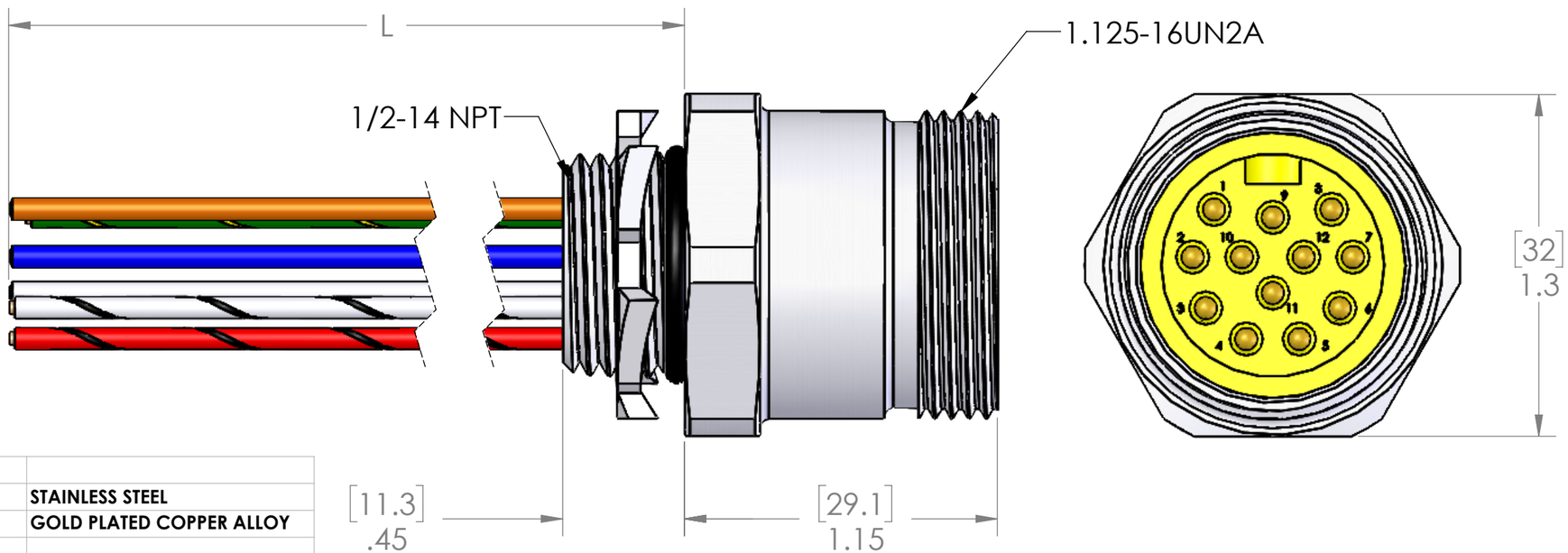

P/N	L
MIN-12MR-1-18-SS	12" [0.3m]
MIN-12MR-2-18-SS	24" [0.6m]
MIN-12MR-3-18-SS	36" [0.9m]
MIN-12MR-4-18-SS	48" [1.2m]
MIN-12MR-5-18-SS	60" [1.5m]
MIN-12MR-6-18-SS	72" [1.8m]
MIN-12MR-10-18-SS	120" [3.0m]
MIN-12MR-15-18-SS	180" [4.6m]

OTHER LENGTHS AVAILABLE
PLEASE CONSULT FACTORY

MATERIALS	
SHELL:	STAINLESS STEEL
CONTACTS:	GOLD PLATED COPPER ALLOY
WIRES:	
STYLE:	UL 1007/1569
AWG:	18 AWG
JACKET:	PVC
VOLTAGE:	300V
INSERT:	YELLOW PVC
O-RING:	NBR
NUT:	ZINC PLATED STEEL
APPROVALS	
US:	UL LISTED
CANADA:	C-UL LISTED
ROHS:	YES
CE & UKCA:	YES
RATINGS	
PROTECTION CLASS:	UL TYPE 4 & 12, IEC IP69

PROPRIETARY AND CONFIDENTIAL

THE INFORMATION CONTAINED IN THIS DRAWING IS THE SOLE PROPERTY OF MENCOM CORPORATION. ANY REPRODUCTION IN PART OR AS A WHOLE WITHOUT THE WRITTEN PERMISSION OF MENCOM CORPORATION IS PROHIBITED.

VOLTS	300V
AMPS	4A
TEMP:	105°C

UNLESS OTHERWISE SPECIFIED:

DIMENSIONS ARE IN INCHES AND [MM]

MATERIAL

FINISH

DO NOT SCALE DRAWING

DRAWN BY	ADM
DRAWN DATE	02/28/2024
CHECKED BY	JJH
CHECK DATE	02/29/2024

COMMENTS:

MENCOM CORPORATION

TITLE:

12 PL MIN ML RECP

SIZE	DWG. NO.	REV
B	MIN-12MR-ZZ-18-SS	B

SCALE: 1.5:1 WEIGHT: SHEET 1 OF 1