| PIN # | COLOR |
|---|---|
| | |
| 1 | ORANGE |
| 2 | BLUE |
| 3 | WHITE w/BLACK |
| 4 | RED w/BLACK |
| 5 | GREEN w/BLACK |
| 6 | ORANGE w/BLACK |
| 7 | BLUE w/BLACK |
| 8 | BLACK w/WHITE |
| 9 | GREEN / YELLOW |
| 10 | RED |
| 11 | WHITE |
| 12 | BLACK |

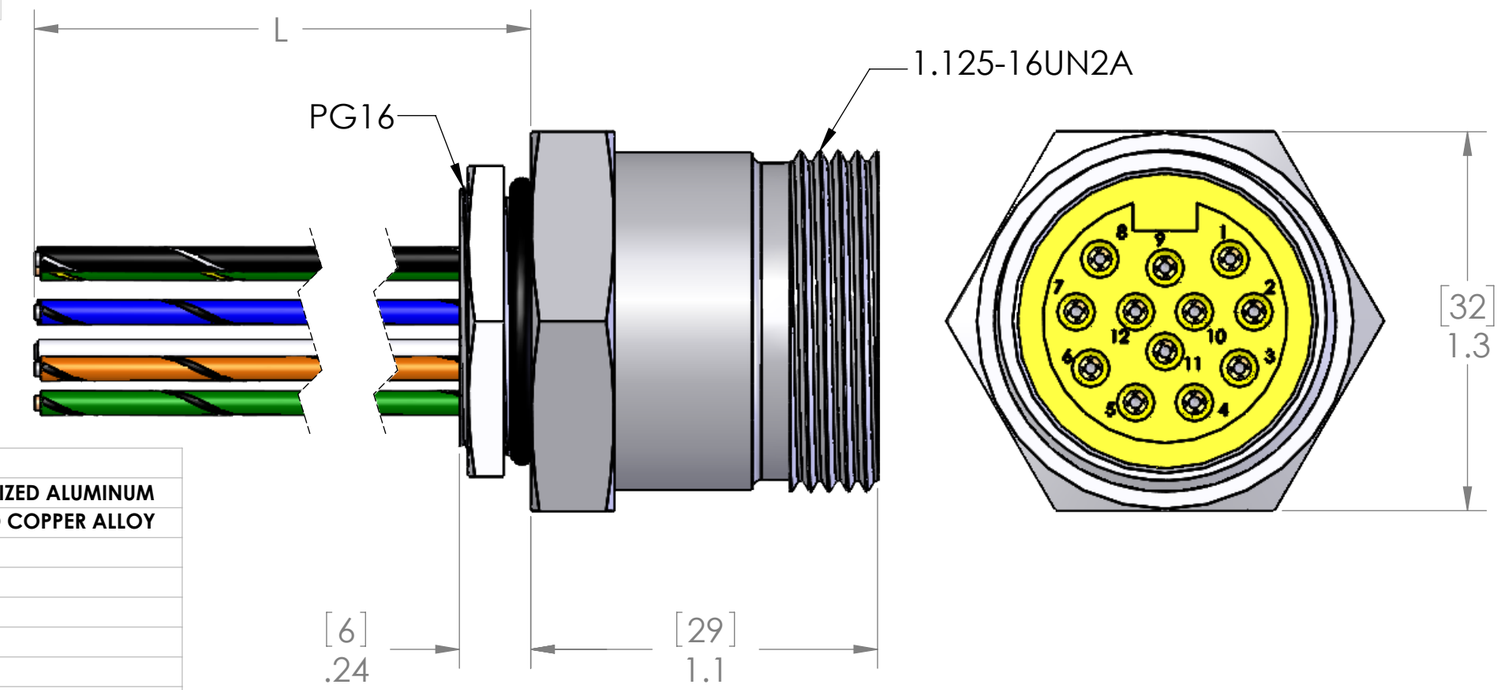


| P/N | L |
|---|---|
| | |
| MIN-12FR-1-18-PG16 | 12" [0.3m] |
| MIN-12FR-2-18-PG16 | 24" [0.6m] |
| MIN-12FR-3-18-PG16 | 36" [0.9m] |
| MIN-12FR-4-18-PG16 | 48" [1.2m] |
| MIN-12FR-5-18-PG16 | 60" [1.5m] |
| MIN-12FR-6-18-PG16 | 72" 1.8m] |
| MIN-12FR-10-18-PG16 | 120" [3m] |

OTHER LENGTHS ARE AVAILABLE
PLEASE CONSULT FACTORY

| | |
|---|---|
| MATERIALS | |
| SHELL: | CLEAR ANODIZED ALUMINUM |
| CONTACTS: | GOLD PLATED COPPER ALLOY |
| WIRES: | |
| STYLE: | UL 1007/1569 |
| AWG: | 18 AWG |
| JACKET: | PVC |
| VOLTAGE: | 300V |
| INSERT: | YELLOW PVC |
| O-RING: | NBR |
| NUT: | NICKEL PLATED BRASS |
| | |
| APPROVALS | |
| US: | UL LISTED |
| CANADA: | C-UL LISTED |
| ROHS: | YES |
| CE & UKCA: | YES |
| | |
| RATINGS | |
| PROTECTION CLASS: | UL TYPE 4 & 12, IEC IP69 |


**PROPRIETARY AND CONFIDENTIAL**

THE INFORMATION CONTAINED IN THIS DRAWING IS THE SOLE PROPERTY OF MENCOM CORPORATION. ANY REPRODUCTION IN PART OR AS A WHOLE WITHOUT THE WRITTEN PERMISSION OF MENCOM CORPORATION IS PROHIBITED.


| | |
|---|---|
| VOLTS | 300V |
| AMPS | 4A |
| TEMP: | 105°C |

UNLESS OTHERWISE SPECIFIED:

DIMENSIONS ARE IN INCHES AND [MM]

MATERIAL

FINISH

DO NOT SCALE DRAWING

| | |
|---|---|
| DRAWN BY | ADM |
| DRAWN DATE | 02/05/2024 |
| CHECKED BY | JJH |
| CHECK DATE | 02/06/2024 |

COMMENTS:

MENCOM CORPORATION

TITLE:

| SIZE | DWG. NO. | REV |
|---|---|---|
| B | MIN-12FR-ZZ-18-PG16 | B |

SCALE: 2:1 WEIGHT: SHEET 1 OF 1