| PIN # | COLOR |
|---|---|
| | |
| 1 | ORANGE |
| 2 | BLUE |
| 3 | WHITE w/BLACK |
| 4 | RED w/BLACK |
| 5 | GREEN w/BLACK |
| 6 | ORANGE w/BLACK |
| 7 | BLUE w/BLACK |
| 8 | BLACK w/WHITE |
| 9 | GREEN / YELLOW |
| 10 | RED |
| 11 | WHITE |
| 12 | BLACK |

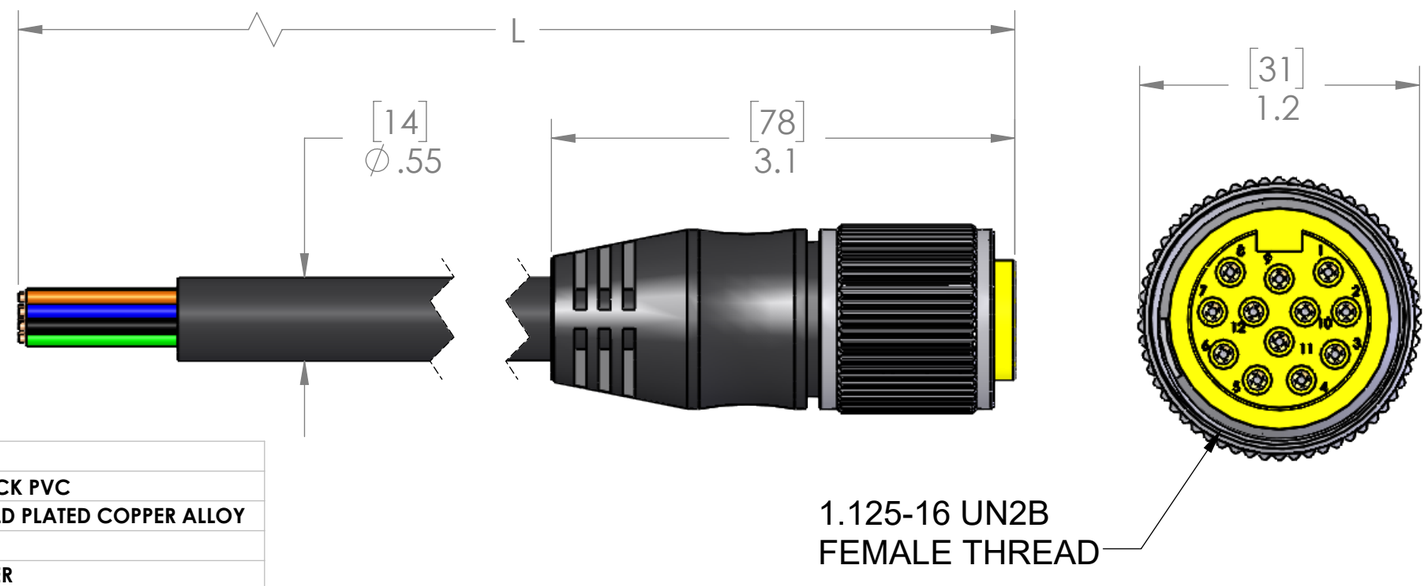


| TABLE A | | |
|---|---|---|
| P/N | L | STD? |
| | | |
| MIN-12FP-3-C011 | 36" [0.9m] | YES |
| MIN-12FP-6-C011 | 72" [1.8m] | YES |
| MIN-12FP-12-C011 | 144" [3.6m] | YES |
| MIN-12FP-20-C011 | 240" [6.1m] | YES |
| MIN-12FP-30-C011 | 360" [9.1m] | YES |
| MIN-12FP-40-C011 | 480" [12.2m] | NO |
| MIN-12FP-50-C011 | 600" [15.2m] | NO |
| MIN-12FP-60-C011 | 720" [18.3m] | NO |
| MIN-12FP-100-C011 | 1200" [30.5m] | NO |

PARTS LISTED AS NOT BEING STANDARD
MAY HAVE MINIMUM ORDER QUANTITIES

| MATERIALS | |
|---|---|
| BODY: | BLACK PVC |
| CONTACTS: | GOLD PLATED COPPER ALLOY |
| CABLE: | |
| STYLE: | TC-ER |
| AWG: | 16 AWG |
| JACKET: | BLACK PVC |
| VOLTAGE: | 600V |
| SHIELD: | NO |
| COUPLING: | NICKEL PLATED BRASS |
| INSERT: | YELLOW PVC |
| O-RING: | N/A |
| | |
| APPROVALS | |
| US: | UL LISTED |
| CANADA: | C-UL LISTED |
| ROHS: | YES |
| CE & UKCA: | YES |
| | |
| RATINGS | |
| PROTECTION CLASS: | UL TYPE 4 & 12, IEC IP69 |


**PROPRIETARY AND CONFIDENTIAL**
THE INFORMATION CONTAINED IN THIS DRAWING IS THE SOLE PROPERTY OF MENCOM CORPORATION. ANY REPRODUCTION IN PART OR AS A WHOLE WITHOUT THE WRITTEN PERMISSION OF MENCOM CORPORATION IS PROHIBITED.


| | |
|---|---|
| VOLTS | 600V |
| AMPS | 7A |
| TEMP: | 105°C |

UNLESS OTHERWISE SPECIFIED:
DIMENSIONS ARE IN INCHES AND [MM]

MATERIAL
FINISH
DO NOT SCALE DRAWING

| | |
|---|---|
| DRAWN BY | JJH |
| DRAWN DATE | 02/05/2024 |
| CHECKED BY | JJH |
| CHECK DATE | 02/06/2024 |

COMMENTS:

MENCOM CORPORATION

TITLE:
12 PL FEM PLG TC/ER

| SIZE | DWG. NO. | REV |
|---|---|---|
| B | MIN-12FP-ZZ-C011 | B |

SCALE: 1:1 WEIGHT: SHEET 1 OF 1