MDC PIN #	COLOR	RJ45 PIN #
1	WHITE / BLUE	5
2	WHITE / BROWN	7
3	BROWN	8
4	ORANGE	2
5	WHITE / GREEN	3
6	WHITE / ORANGE	1
7	BLUE	4
8	GREEN	6
N/A	SHIELD	SHELL

NOTE: CABLE SHIELD IS ELECTRICALLY CONNECTED TO THE SHIELD OF THE RJ45

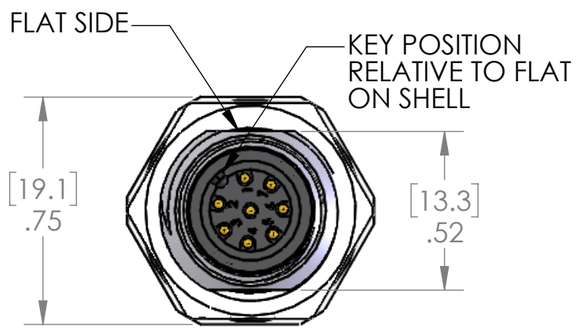

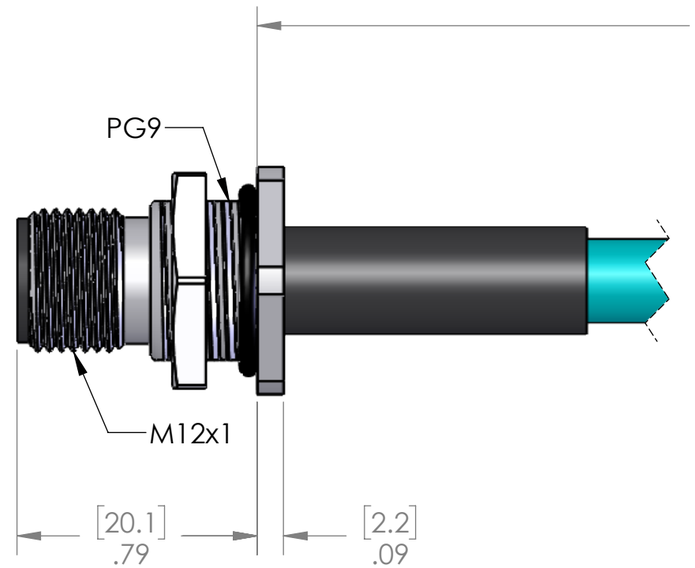

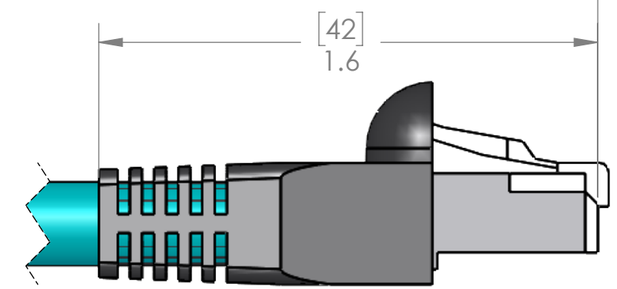

P/N	L
MDE45PB-8MR-RJ45S-BM	12" [0.3M]
MDE45PB-8MR-RJ45S-BM-1M	40" [1M]
MDE45PB-8MR-RJ45S-BM-2M	79" [2M]
MDE45PB-8MR-RJ45S-BM-3M	118" [3M]
MDE45PB-8MR-RJ45S-BM-5M	197" [5M]
MDE45PB-8MR-RJ45S-BM-6M	236" [6M]
MDE45PB-8MR-RJ45S-BM-10M	393" [10M]

OTHER LENGTHS ARE AVAILABLE
PLEASE CONSULT FACTORY

MATERIALS	
SHELL:	NICKEL PLATED BRASS
CONTACTS:	GOLD PLATED COPPER ALLOY
CABLE:	
STYLE:	AWM CAT 5e
AWG:	24 AWG
JACKET:	TEAL PUR
VOLTAGE:	600V
SHIELD:	BRAIDED
FLEX CYCLES:	6MM
INSERT:	BLACK POLYAMIDE
O-RING:	NBR
NUT:	NICKEL PLATED BRASS
HEATSHRINK:	POLYOLEFIN
APPROVALS	
US:	UL LISTED
CANADA:	C-UL LISTED
ROHS:	YES
CE & UKCA:	YES
RATINGS	
PROTECTION CLASS:	UL TYPE 4 & 12, IEC IP69

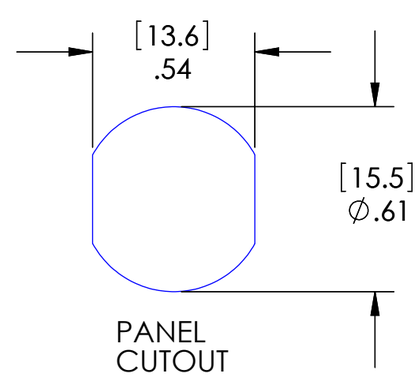

PROPRIETARY AND CONFIDENTIAL
THE INFORMATION CONTAINED IN THIS DRAWING IS THE SOLE PROPERTY OF MENCOM CORPORATION. ANY REPRODUCTION IN PART OR AS A WHOLE WITHOUT THE WRITTEN PERMISSION OF MENCOM CORPORATION IS PROHIBITED.

VOLTS	42VDC
AMPS	1.5A
TEMP:	80°C

UNLESS OTHERWISE SPECIFIED:
DIMENSIONS ARE IN INCHES AND [MM]
MATERIAL
FINISH
DO NOT SCALE DRAWING

DRAWN BY	RP
DRAWN DATE	08/22/2024
CHECKED BY	JJH
CHECK DATE	08/23/2024

COMMENTS:

MENCOM CORPORATION

TITLE:
BK MT 8 PL MDC ENET TO RJ45

SIZE B | DWG. NO. MDE45PB-8MR-RJ45S-BM-ZZ | REV A

SCALE: 2:1 | WEIGHT: | SHEET 1 OF 1