REVISIONS			
REV.	DESCRIPTION	DATE	APPROVED
A	REDRAWN IN SW	3/12/2010	

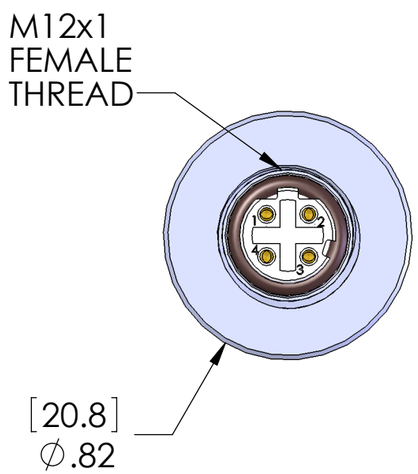

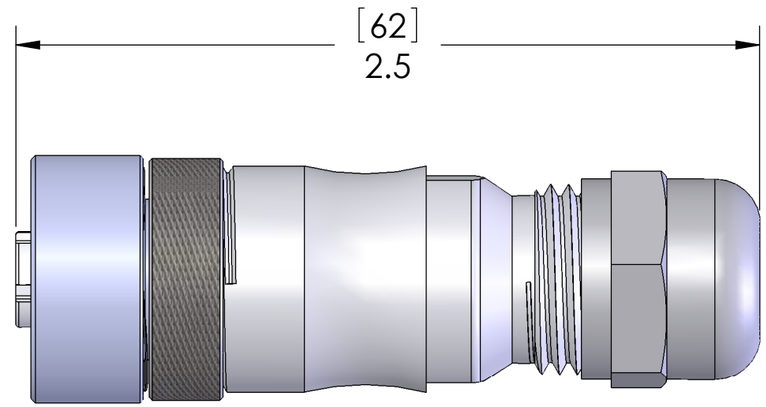

MATERIALS:	
BODY:	NICKEL PLATED BRASS
INSERT:	PBT
COUPLING:	NICKEL PLATED ZINC
CONTACTS:	GOLD PLATED COPPER ALLOY
GROMMET:	NBR
O-RING:	FPM
SPECIFICATIONS:	
WIRE RANGE:	18-24AWG [1.0 - 0.25sqmm]
CABLE RANGE:	0.118 - 0.345 [3 - 9mm]
CONNECTION:	SCREW TERMINALS
VOLTS:	250V
AMPS:	4A
SEAL:	IP67

PROPRIETARY AND CONFIDENTIAL
THE INFORMATION CONTAINED IN THIS DRAWING IS THE SOLE PROPERTY OF MENCOM CORPORATION. ANY REPRODUCTION IN PART OR AS A WHOLE WITHOUT THE WRITTEN PERMISSION OF MENCOM CORPORATION IS PROHIBITED.

UNLESS OTHERWISE SPECIFIED:
DIMENSIONS ARE IN INCHES AND [MM]
MATERIAL
FINISH
DO NOT SCALE DRAWING

	NAME
DRAWN	BEM
CHECKED	
ENG APPR.	
MFG APPR.	
Q.A.	
COMMENTS:	

MENCOM CORPORATION

TITLE:

SIZE B | DWG. NO. MDE45M-4FP-FW | REV A

SCALE: 2:1 | WEIGHT: | SHEET 1 OF 1