PIN #	COLOR
1	WHITE / BLUE
2	WHITE / BROWN
3	BROWN
4	ORANGE
5	WHITE / GREEN
6	WHITE / ORANGE
7	BLUE
8	GREEN

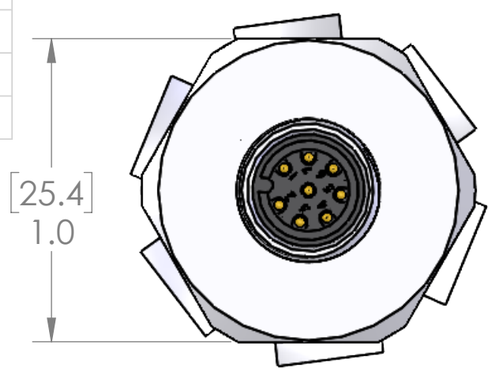

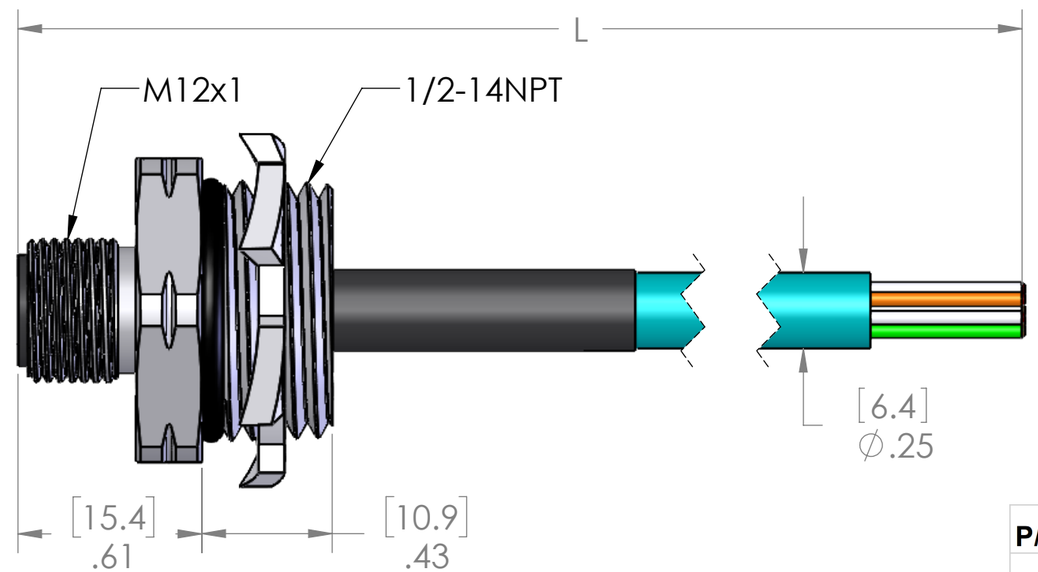

P/N	L
MDE45-8MR-2-0.3M	12" [0.3m]
MDE45-8MR-2-0.5M	20" [0.5m]
MDE45-8MR-2-1M	40" [1m]
MDE45-8MR-2-2M	79" [2m]
MDE45-8MR-2-3M	118" [3m]
MDE45-8MR-2-4M	157" [4m]
MDE45-8MR-2-5M	197" [5m]
MDE45-8MR-2-6M	236" [6m]
MDE45-8MR-2-10M	393" [10m]

OTHER LENGTHS ARE AVAILABLE
PLEASE CONSULT FACTORY

MATERIALS	
SHELL:	CLEAR ANODIZED ALUMINUM
CONTACTS:	GOLD PLATED COPPER ALLOY
CABLE:	
STYLE:	AWM CAT 5e
AWG:	24 AWG
JACKET:	TEAL PVC
VOLTAGE:	600V
SHIELD:	NO
INSERT:	POLYAMIDE
O-RING:	NBR
NUT:	ZINC PLATED STEEL
HEATSHRINK:	POLYOLEFIN
APPROVALS	
US:	UL LISTED
CANADA:	C-UL LISTED
ROHS:	YES
CE & UKCA:	YES
RATINGS	
PROTECTION CLASS:	UL TYPE 4 & 12, IEC IP69

PROPRIETARY AND CONFIDENTIAL
THE INFORMATION CONTAINED IN THIS DRAWING IS THE SOLE PROPERTY OF MENCOM CORPORATION. ANY REPRODUCTION IN PART OR AS A WHOLE WITHOUT THE WRITTEN PERMISSION OF MENCOM CORPORATION IS PROHIBITED.

VOLTS	60V
AMPS	2A
TEMP:	80°C

UNLESS OTHERWISE SPECIFIED:
DIMENSIONS ARE IN INCHES AND [MM]

MATERIAL
FINISH
DO NOT SCALE DRAWING

DRAWN BY	ADM
DRAWN DATE	08/16/2023
CHECKED BY	JJH
CHECK DATE	08/17/2023

COMMENTS:

MENCOM CORPORATION

TITLE:

SIZE B | DWG. NO. MDE45-8MR-2-ZZ | REV B

SCALE: 2:1 | WEIGHT: | SHEET 1 OF 1