MDE45 PIN #	COLOR	RJ45 PIN #
1	WHITE/BLUE	5
2	WHITE/BROWN	7
3	BROWN	8
4	ORANGE	2
5	WHITE/GREEN	3
6	WHITE/ORANGE	1
7	BLUE	4
8	GREEN	6

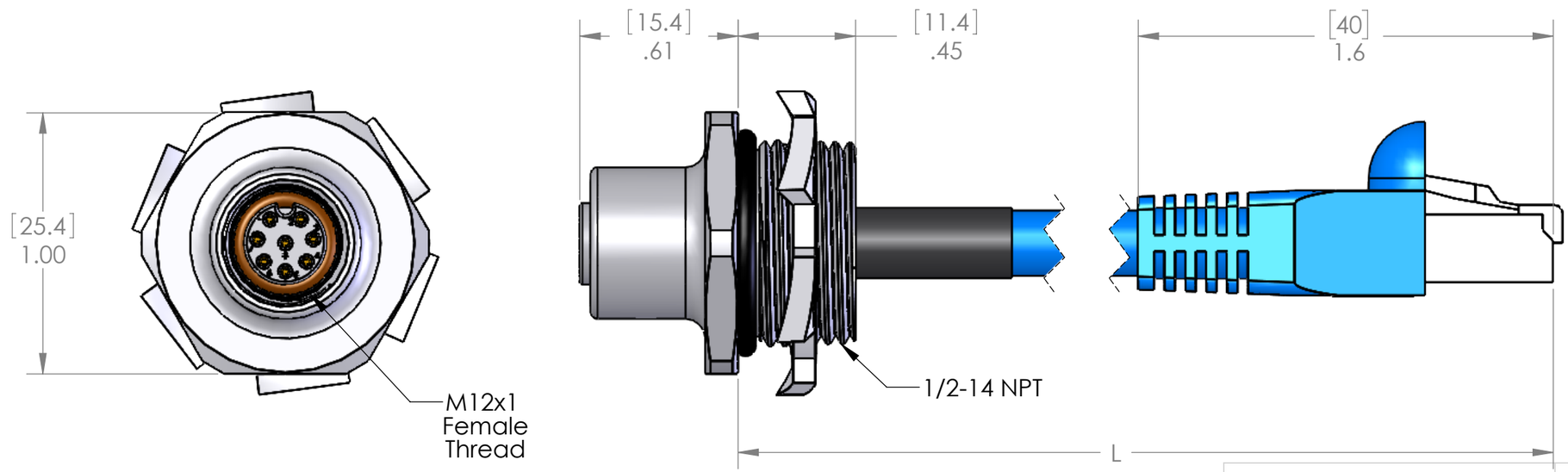

P/N	L
MDE45-8FR-RJ45-2-0.15M	6" [0.15M]
MDE45-8FR-RJ45-2	12" [0.3M]
MDE45-8FR-RJ45-2-0.5M	20" [0.5M]
MDE45-8FR-RJ45-2-1M	40"[1M]
MDE45-8FR-RJ45-2-2M	80"[2M]
MDE45-8FR-RJ45-2-5M	197"[5M]
MDE45-8FR-RJ45-2-10M	393"[10M]

OTHER LENGTHS ARE AVAILABLE
PLEASE CONSULT FACTORY

MATERIALS	
SHELL:	**CLEAR ANODIZED ALUMINUM**
CONTACTS:	**GOLD PLATED COPPER ALLOY**
CABLE:	
STYLE:	**AWM CAT 5e**
AWG:	**24 AWG**
JACKET:	**TEAL PVC**
VOLTAGE:	**600V**
SHIELD:	**NO**
INSERT:	**POLYAMIDE**
O-RING:	**NBR & FPM**
NUT:	**ZINC PLATED STEEL**
HEATSHRINK:	**POLYOLEFIN**
APPROVALS	
US:	**UL LISTED**
CANADA:	**C-UL LISTED**
ROHS:	**YES**
CE & UKCA:	**YES**
RATINGS	
PROTECTION CLASS:	**UL TYPE 4 & 12, IEC IP69**

PROPRIETARY AND CONFIDENTIAL
THE INFORMATION CONTAINED IN THIS DRAWING IS THE SOLE PROPERTY OF MENCOM CORPORATION. ANY REPRODUCTION IN PART OR AS A WHOLE WITHOUT THE WRITTEN PERMISSION OF MENCOM CORPORATION IS PROHIBITED.

VOLTS	42VDC
AMPS	1.5A
TEMP:	80°C

UNLESS OTHERWISE SPECIFIED:
DIMENSIONS ARE IN INCHES AND [MM]

MATERIAL

FINISH

DO NOT SCALE DRAWING

DRAWN BY	ADM
DRAWN DATE	08/16/2023
CHECKED BY	JJH
CHECK DATE	08/17/2023

COMMENTS:

MENCOM CORPORATION

TITLE:

SIZE	DWG. NO.	REV
B	MDE45-8FR-RJ45-2-ZZ	C

SCALE: 2:1 WEIGHT: SHEET 1 OF 1