PIN #	COLOR
1	BROWN
2	WHITE
3	BLUE
4	BLACK
SHIELD	COUPLING

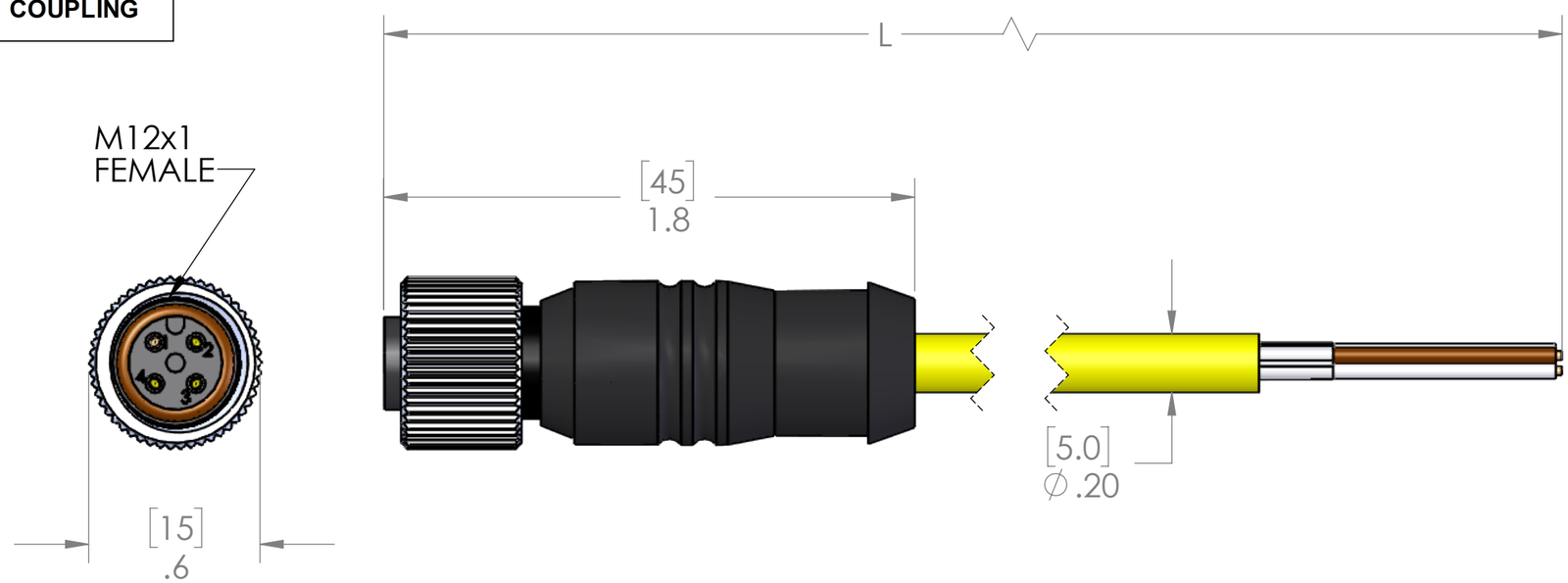

TABLE A		
P/N	L	STD?
MDCM-4FSP-1M	40"[1M]	YES
MDCM-4FSP-2M	79" [2M]	YES
MDCM-4FSP-3M	118" [3M]	NO
MDCM-4FSP-4M	157" [4M]	NO
MDCM-4FSP-5M	197" [5M]	YES
MDCM-4FSP-6M	236" [6M]	NO
MDCM-4FSP-8M	315" [8M]	NO
MDCM-4FSP-10M	393" [10M]	YES
MDCM-4FSP-15M	590" [15M]	YES

PARTS LISTED AS NOT BEING STANDARD
MAY HAVE MINIMUM ORDER QUANTITIES

MATERIALS	
BODY:	BLACK PVC
CONTACTS:	GOLD PLATED COPPER ALLOY
CABLE:	
STYLE:	AWM
AWG:	22 AWG
JACKET:	YELLOW PVC
VOLTAGE:	600V
SHIELD:	MYLAR W/DRAIN
COUPLING:	NICKEL PLATED BRASS
INSERT:	POLYAMIDE
O-RING:	FPM
APPROVALS	
US:	UL LISTED
CANADA:	C-UL LISTED
ROHS:	YES
CE & UKCA:	YES
RATINGS	
PROTECTION CLASS:	UL TYPE 4 & 12, IEC IP69

PROPRIETARY AND CONFIDENTIAL

THE INFORMATION CONTAINED IN THIS DRAWING IS THE SOLE PROPERTY OF MENCOM CORPORATION. ANY REPRODUCTION IN PART OR AS A WHOLE WITHOUT THE WRITTEN PERMISSION OF MENCOM CORPORATION IS PROHIBITED.

VOLTS	300V
AMPS	4A
TEMP:	105°C

UNLESS OTHERWISE SPECIFIED:

DIMENSIONS ARE IN INCHES AND [MM]

MATERIAL

FINISH

DO NOT SCALE DRAWING

DRAWN BY	ADM
DRAWN DATE	07/20/2023
CHECKED BY	JJH
CHECK DATE	07/24/2023

COMMENTS:

MENCOM CORPORATION

TITLE:

SIZE	DWG. NO.	REV
B	MDCM-4FSP-ZZ	B
SCALE: 1:1	WEIGHT:	SHEET 1 OF 1