REVISIONS			
REV.	DESCRIPTION	DATE	APPROVED
A	REDRAWN IN SW	3/15/2006	

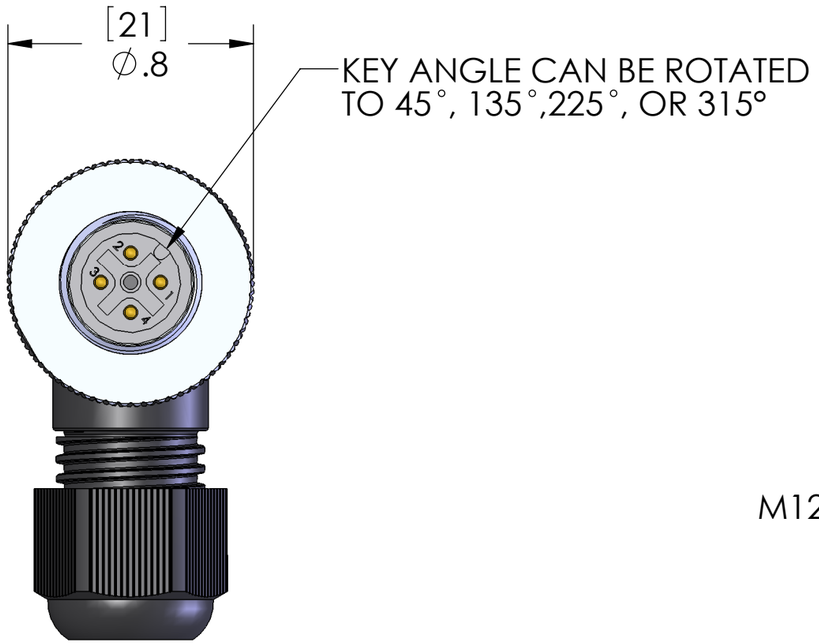

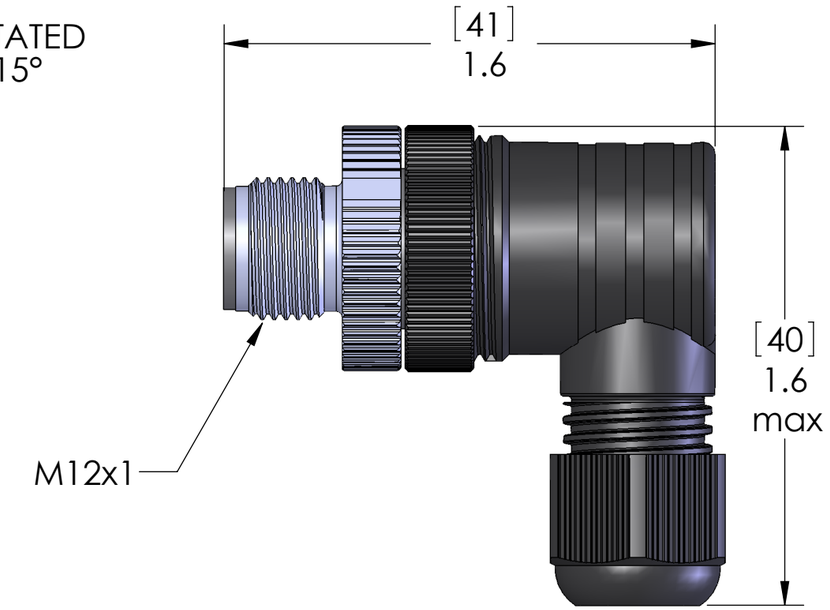

MATERIALS:	
BODY:	POLYAMIDE
COUPLING:	NICKEL PLATED ZINC
CONTACTS:	GOLD PLATED COPPER ALLOY
GROMMET:	NBR
SPECIFICATIONS:	
WIRE RANGE:	18-24AWG [1.0 - 0.25sqmm]
CABLE RANGE:	0.118 - 0.255 [3 - 6.5mm]
CONNECTION:	SCREW TERMINALS
VOLTS:	250V
AMPS:	4A
SEAL:	IP67

APPROVALS:	
US:	UL RECOGNIZED
CANADA:	C-UL RECOGNIZED

PROPRIETARY AND CONFIDENTIAL

THE INFORMATION CONTAINED IN THIS DRAWING IS THE SOLE PROPERTY OF MENCOM CORPORATION. ANY REPRODUCTION IN PART OR AS A WHOLE WITHOUT THE WRITTEN PERMISSION OF MENCOM CORPORATION IS PROHIBITED.

UNLESS OTHERWISE SPECIFIED:

DIMENSIONS ARE IN INCHES AND [MM]

MATERIAL

FINISH

DO NOT SCALE DRAWING

	NAME
DRAWN	BEM
CHECKED	
ENG APPR.	
MFG APPR.	
Q.A.	

COMMENTS:

MENCOM CORPORATION

TITLE:

4 POLE R/A MALE
FIELD WIREABLE PLUG

SIZE B | DWG. NO. MDC-4MP-FW07-R | REV A

SCALE: 2:1 | WEIGHT: | SHEET 1 OF 1