MALE PIN #		FEMALE PIN #
1	-------	1
2	-------	2
3	-------	3
4	-------	4

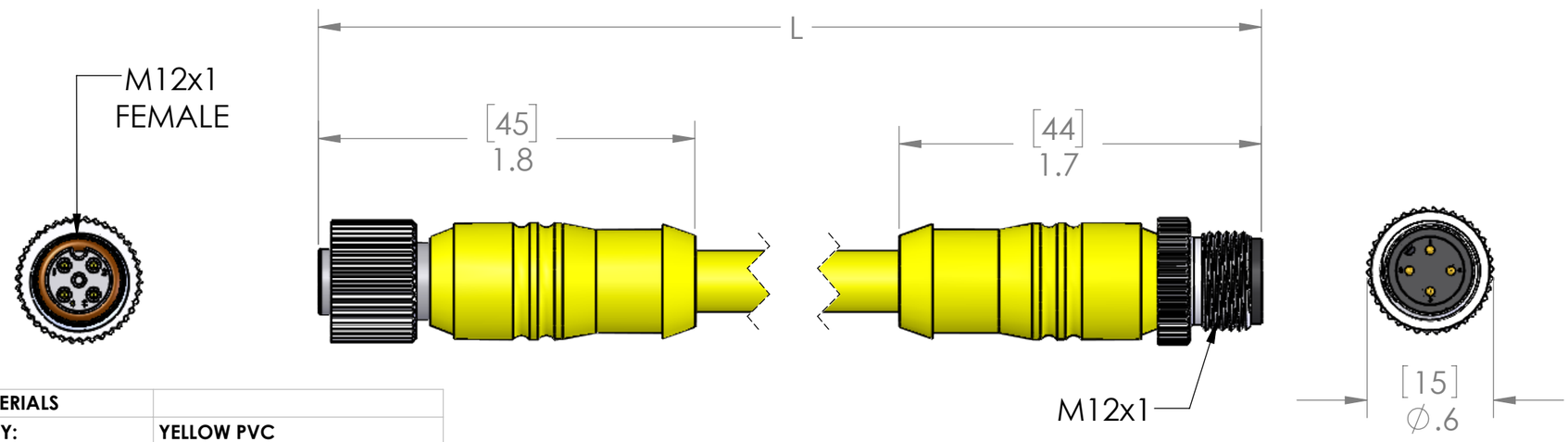

TABLE A		
P/N	L	STD?
MDC-4MFPX-0.5M	20" [0.5M]	YES
MDC-4MFPX-1M	40" [1M]	YES
MDC-4MFPX-2M	79" [2M]	YES
MDC-4MFPX-3M	118" [3M]	YES
MDC-4MFPX-4M	157" [4M]	YES
MDC-4MFPX-5M	197" [5M]	YES
MDC-4MFPX-8M	315" [8M]	NO
MDC-4MFPX-10M	393" [10M]	YES
MDC-4MFPX-15M	590" [15M]	YES
MDC-4MFPX-20M	786" [20M]	NO
MDC-4MFPX-25M	983" [25M]	NO
MDC-4MFPX-30M	1179" [30M]	NO

PARTS LISTED AS NOT BEING STANDARD MAY REQUIRE MINIMUM ORDERS

MATERIALS	
BODY:	YELLOW PVC
CONTACTS:	GOLD PLATED COPPER ALLOY
CABLE:	
STYLE:	AWM
AWG:	18 AWG
JACKET:	YELLOW PVC
VOLTAGE:	600V
SHIELD:	NO
COUPLING:	NICKEL PLATED BRASS
INSERT:	POLYAMIDE
O-RING:	FPM
APPROVALS	
US:	UL LISTED
CANADA:	C-UL LISTED
ROHS:	YES
CE & UKCA:	YES
RATINGS	
PROTECTION CLASS:	UL TYPE 4 & 12, IEC IP69

PROPRIETARY AND CONFIDENTIAL

THE INFORMATION CONTAINED IN THIS DRAWING IS THE SOLE PROPERTY OF MENCOM CORPORATION. ANY REPRODUCTION IN PART OR AS A WHOLE WITHOUT THE WRITTEN PERMISSION OF MENCOM CORPORATION IS PROHIBITED.

VOLTS	300V
AMPS	4A
TEMP:	105°C

UNLESS OTHERWISE SPECIFIED:

DIMENSIONS ARE IN INCHES AND [MM]

MATERIAL

FINISH

DO NOT SCALE DRAWING

DRAWN BY	ADM
DRAWN DATE	06/13/2023
CHECKED BY	JJH
CHECK DATE	06/13/2023

COMMENTS:

MENCOM CORPORATION

TITLE:

4 PL MDC M-F EXT 18AWG

SIZE B | DWG. NO. MDC-4MFPX-ZZ | REV B

SCALE: 3:2 | WEIGHT: | SHEET 1 OF 1