MALE PIN #	FEMALE PIN #
1	1
2	2
3	3
4	4

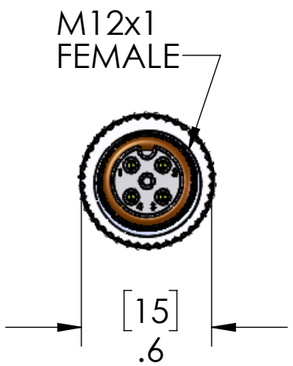

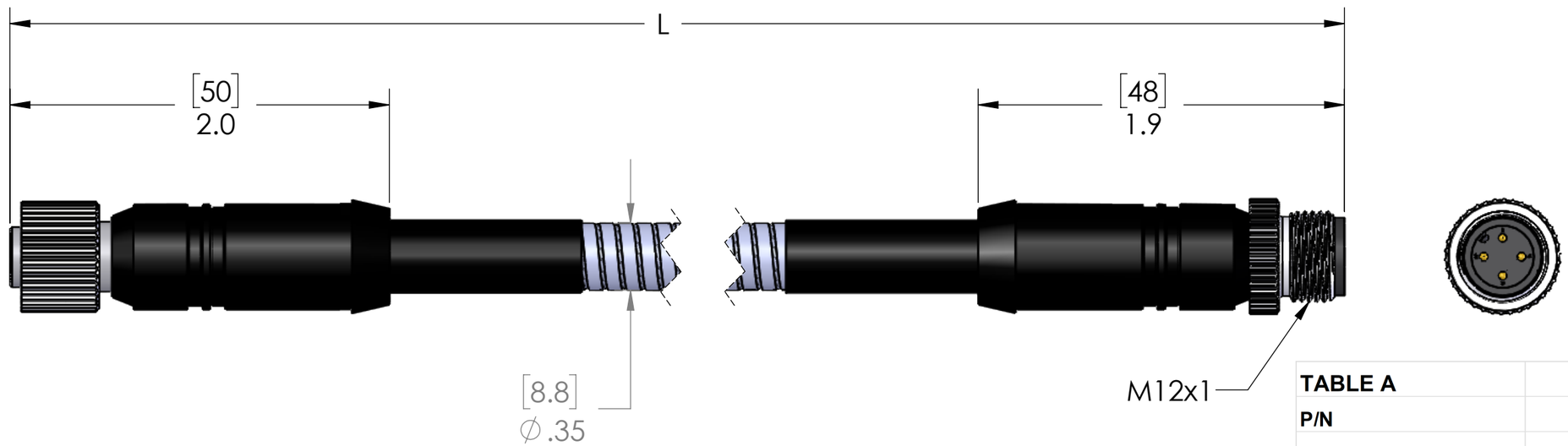

TABLE A		
P/N	L	STD?
MDC-4MFP-0.5M-A01	20" [0.5M]	NO
MDC-4MFP-1M-A01	40" [1M]	YES
MDC-4MFP-1.5M-A01	59" [1.5M]	NO
MDC-4MFP-2M-A01	79" [2M]	YES
MDC-4MFP-3M-A01	118" [3M]	NO
MDC-4MFP-4M-A01	157" [4M]	NO
MDC-4MFP-5M-A01	197" [5M]	YES
MDC-4MFP-6M-A01	236" [6M]	NO
MDC-4MFP-8M-A01	315" [8M]	NO
MDC-4MFP-10M-A01	393" [10M]	YES

PARTS LISTED AS NOT BEING STANDARD
MAY HAVE MINIMUM ORDER QUANTITIES

MATERIALS	
BODY:	BLACK PVC
CONTACTS:	GOLD PLATED COPPER ALLOY
CABLE:	
STYLE:	AWM
AWG:	22 AWG
JACKET:	YELLOW PVC
VOLTAGE:	600V
SHIELD:	NO
COUPLING:	NICKEL PLATED BRASS
INSERT:	POLYAMIDE
O-RING:	FPM
ARMOR:	SS FLEX TUBE
HEAT SHRINK:	POLYOLEFIN
APPROVALS	
US:	UL LISTED
CANADA:	C-UL LISTED
ROHS:	YES
CE:	YES
RATINGS	
PROTECTION CLASS:	UL TYPE 4 & 12, IEC IP69

PROPRIETARY AND CONFIDENTIAL
THE INFORMATION CONTAINED IN THIS DRAWING IS THE SOLE PROPERTY OF MENCOM CORPORATION. ANY REPRODUCTION IN PART OR AS A WHOLE WITHOUT THE WRITTEN PERMISSION OF MENCOM CORPORATION IS PROHIBITED.

VOLTS	300V
AMPS	4A
TEMP:	105°C

UNLESS OTHERWISE SPECIFIED:
DIMENSIONS ARE IN INCHES AND [MM]

MATERIAL
FINISH
DO NOT SCALE DRAWING

DRAWN BY	ADM
DRAWN DATE	07/20/2023
CHECKED BY	JJH
CHECK DATE	07/20/2023

COMMENTS:

MENCOM CORPORATION

TITLE:

SIZE	DWG. NO.	REV
B	MDC-4MFP-ZZ-A01	B

SCALE: 1:1 WEIGHT: SHEET 1 OF 1