WIRING			
PIN #	COLOR	PIN #	COLOR
1	WHITE	10	VIOLET
2	BROWN	11	GRAY/PINK
3	GREEN	12	RED/BLUE
4	YELLOW	13	WHITE/GREEN
5	GRAY	14	BROWN/GREEN
6	PINK	15	WHITE/YELLOW
7	BLUE	16	YELLOW/BROWN
8	RED	17	WHITE/GRAY
9	BLACK		

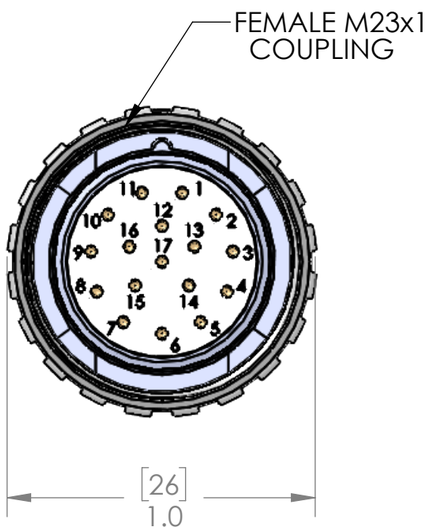

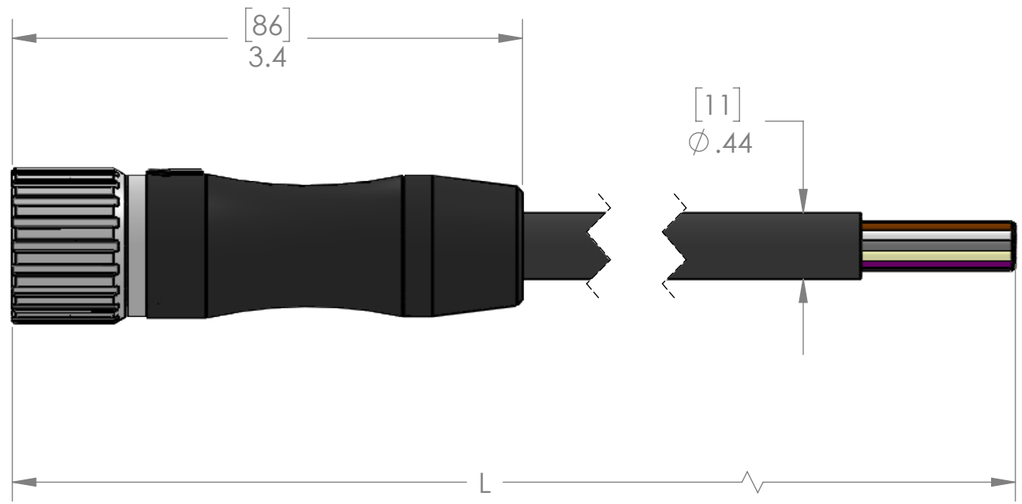

TABLE A		
P/N	L	STD?
MCV-17FPX-1M-C010	40" [1m]	YES
MCV-17FPX-2M-C010	79" [2m]	YES
MCV-17FPX-3M-C010	118" [3m]	NO
MCV-17FPX-4M-C010	157" [4m]	NO
MCV-17FPX-5M-C010	197" [5m]	YES
MCV-17FPX-6M-C010	236" [6m]	NO
MCV-17FPX-8M-C010	315" [8m]	NO
MCV-17FPX-10M-C010	393" [10m]	YES
MCV-17FPX-15M-C010	590" [15m]	YES
MCV-17FPX-20M-C010	786" [20m]	YES

PARTS LISTED AS NOT BEING STANDARD
MAY HAVE MINIMUM ORDER QUANTITIES

MATERIALS:	
BODY:	BLACK PUR
CONTACTS:	GOLD PLATED COPPER ALLOY
COUPLINGS:	NICKEL PLATED BRASS
O-RING:	NBR
CABLE:	18/17 ITC-ER, BLACK

PROPRIETARY AND CONFIDENTIAL

THE INFORMATION CONTAINED IN THIS DRAWING IS THE SOLE PROPERTY OF MENCOM CORPORATION. ANY REPRODUCTION IN PART OR AS A WHOLE WITHOUT THE WRITTEN PERMISSION OF MENCOM CORPORATION IS PROHIBITED.

VOLTS	150V
AMPS	5A
TEMP	90°C

UNLESS OTHERWISE SPECIFIED:
DIMENSIONS ARE IN INCHES AND [MM]

MATERIAL

FINISH

DO NOT SCALE DRAWING

DRAWN BY	GO
DRAWN DATE	02/23/2021
CHECKED BY	JJH
CHECK DATE	02/23/2021

COMMENTS:

MENCOM CORPORATION

TITLE:
17 PL ML CBL 18AWG

SIZE B | DWG. NO. MCV-17FPX-ZZ-C010 | REV A

SCALE: 1:1 | WEIGHT: | SHEET 1 OF 1