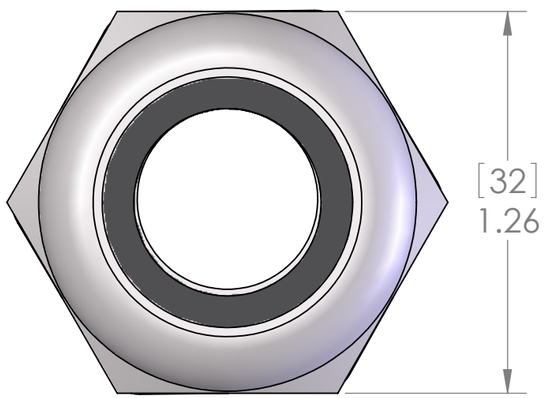

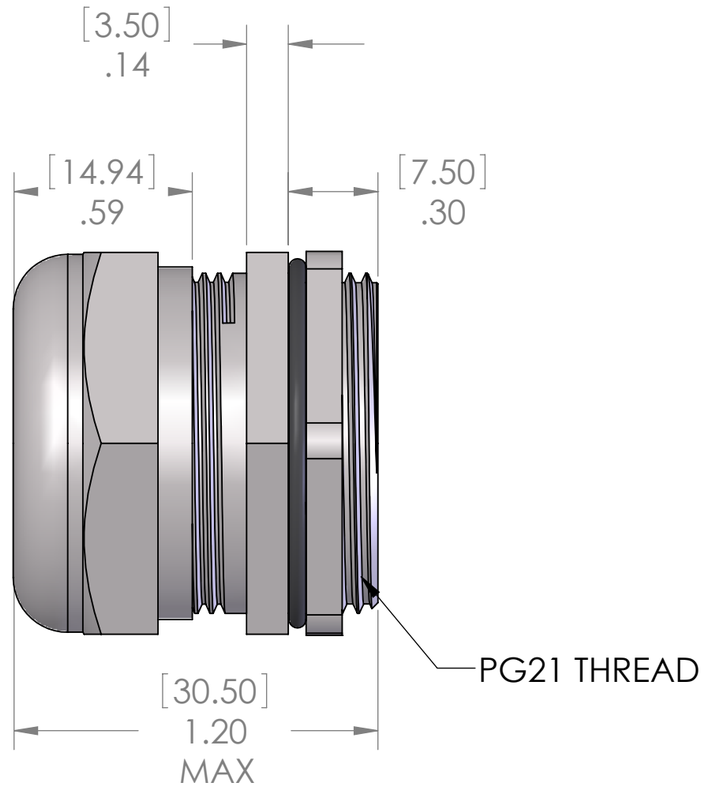

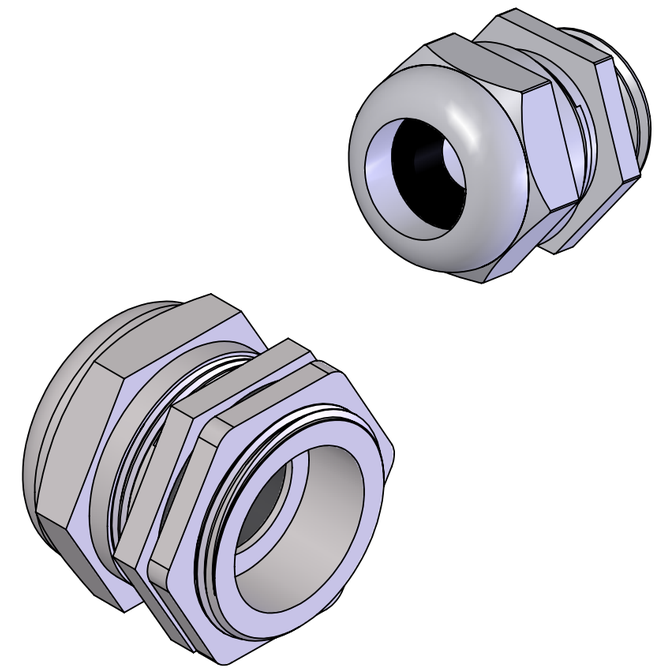

SEAL RATED TO: IP 65

SPECIFICATIONS:	
TIGHTENING TORQUE:	10 Nm
TEMPERATURE:	-30°C - +110°C
MATERIALS:	
BODY:	NICKEL PLATED BRASS
GROMMET:	NBR
LOCK NUT:	NICKEL PLATED BRASS
O-RING:	NBR

PART NUMBER	SEALING RANGE
MCGW-21	.511 - .787 [13 - 20 MM]

PROPRIETARY AND CONFIDENTIAL
THE INFORMATION CONTAINED IN THIS DRAWING IS THE SOLE PROPERTY OF MENCOM CORPORATION. ANY REPRODUCTION IN PART OR AS A WHOLE WITHOUT THE WRITTEN PERMISSION OF MENCOM CORPORATION IS PROHIBITED.

UNLESS OTHERWISE SPECIFIED:
DIMENSIONS ARE IN INCHES AND [MM]

MATERIAL

FINISH

DO NOT SCALE DRAWING

DRAWN BY	GO
DRAWN DATE	11/13/2020
CHECKED BY	JJH
CHECK DATE	11/13/2020

COMMENTS:

MENCOM CORPORATION

TITLE:

SIZE	DWG. NO.	REV
B	MCGW-21	A
SCALE: 3:1	WEIGHT:	SHEET 1 OF 1