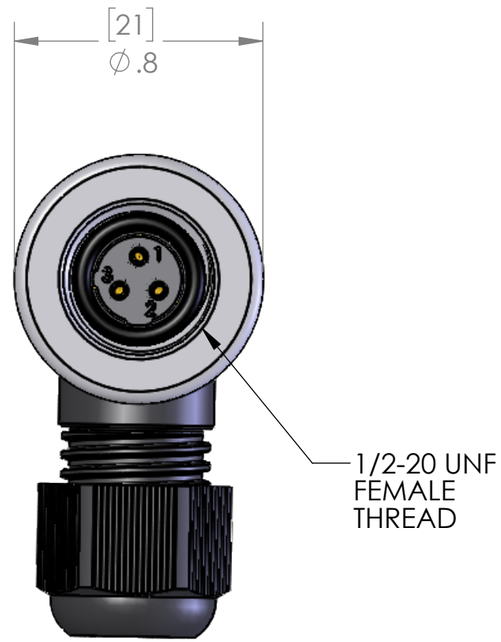

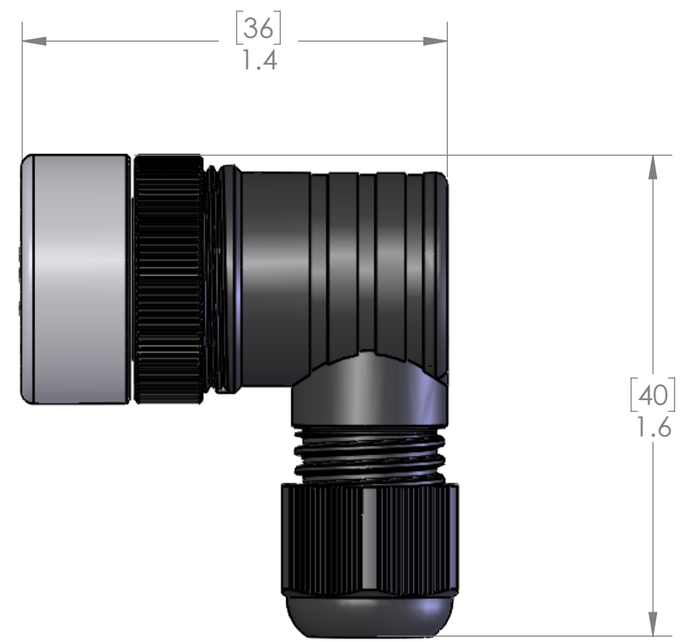

MATERIALS:	
BODY:	POLYAMIDE
COUPLING:	NICKEL PLATED BRASS
CONTACTS:	GOLD PLATED COPPER ALLOY
GROMMET:	NBR
O-RING:	FPM & NBR
SPECIFICATIONS:	
WIRE RANGE:	18-24AWG [1.0 - 0.25sqmm]
CABLE RANGE:	0.118 - 0.255 [3 - 6.5mm]
CONNECTION:	SCREW TERMINALS
VOLTS:	250V
AMPS:	4A
SEAL:	IP67
TEMP RANGE:	STATIC: -40°C - +105°C
	DYNAMIC: -20°C -+105°C

Voltage rating is 250V or the rating of the cable, whichever is less.

PROPRIETARY AND CONFIDENTIAL
THE INFORMATION CONTAINED IN THIS DRAWING IS THE SOLE PROPERTY OF MENCOM CORPORATION. ANY REPRODUCTION IN PART OR AS A WHOLE WITHOUT THE WRITTEN PERMISSION OF MENCOM CORPORATION IS PROHIBITED.

UNLESS OTHERWISE SPECIFIED:
DIMENSIONS ARE IN INCHES AND [MM]

MATERIAL
FINISH
DO NOT SCALE DRAWING

DRAWN BY	ADM
DRAWN DATE	07/25/2023
CHECKED BY	JJH
CHECK DATE	07/25/2023

COMMENTS:

MENCOM CORPORATION

TITLE:
3 PL FM MAC FW PLUG

SIZE	DWG. NO.	REV
B	MAC-3FP-FW07-R	B

SCALE: 2:1 | WEIGHT: | SHEET 1 OF 1