REVISIONS			
REV.	DESCRIPTION	DATE	APPROVED
A	DRAWN IN SW	2/18/2016	BEM

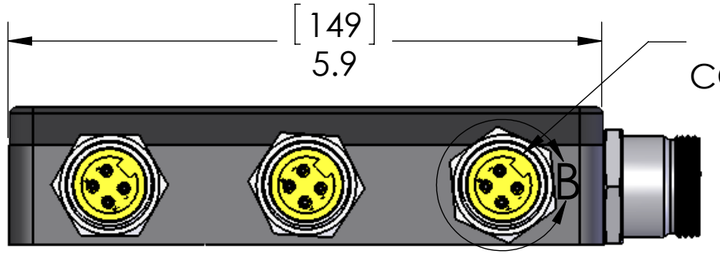

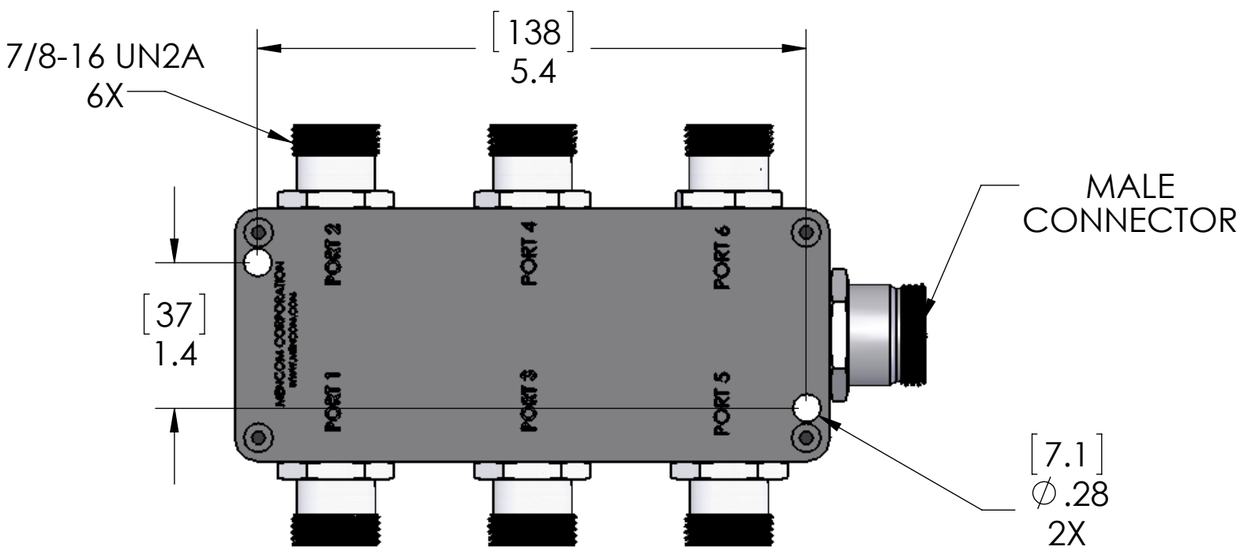

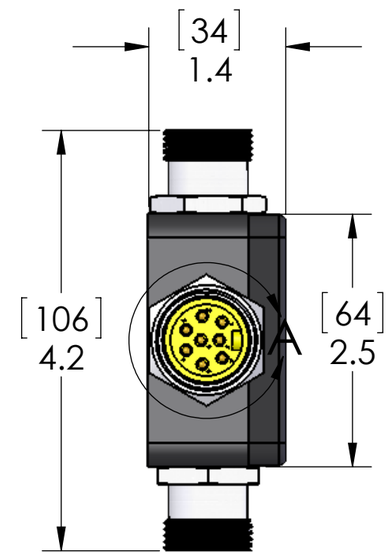

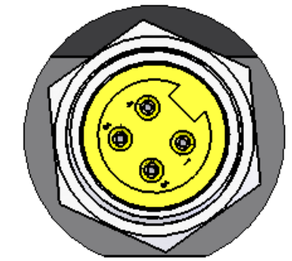

DETAIL B
SCALE 2 : 1.5

DETAIL A
SCALE 2 : 1.5

ORIENTATION OF ALL INSERTS AS SHOWN

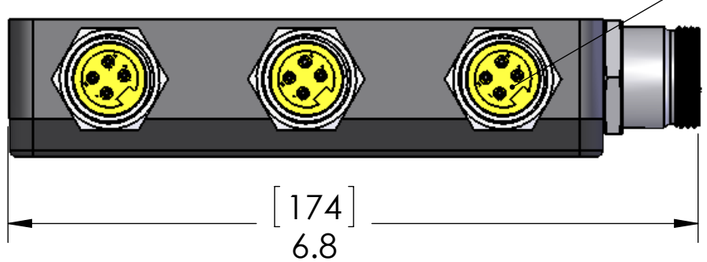

WIRING						
MIN-8 PIN	PORT 1	PORT 2	PORT 3	PORT 4	PORT 5	PORT 6
PIN 1 - ORANGE		PIN 1				
PIN 2 - BLUE				PIN 1		
PIN 3 - WHITE/BLK					PIN 1	
PIN 4 - BLACK			PIN 1			
PIN 5 - WHITE	PIN 3	PIN 3	PIN 3	PIN 3	PIN 3	PIN 3
PIN 6 - RED	PIN 1					
PIN 7 - GRN/YEL	PIN 2	PIN 2	PIN 2	PIN 2	PIN 2	PIN 2
PIN 8 - RED/BLK						PIN 1

SPECIFICATIONS:	
MATERIALS:	
BODY:	ZINC DIECAST WITH BLACK EPOXY COAT
RECEPTACLE SHELLS:	CLEAR ANODIZED ALUMINUM
RECEPTACLE INSERTS:	YELLOW PVC
CONTACTS:	GOLD PLATED COPPER ALLOY

RATINGS:	
AMPS:	5.5 AMPS TOTAL (LIMITED BY MATING CABLE)
VOLTS:	300V
SEAL:	IP67

PROPRIETARY AND CONFIDENTIAL
THE INFORMATION CONTAINED IN THIS DRAWING IS THE SOLE PROPERTY OF MENCOM CORPORATION. ANY REPRODUCTION IN PART OR AS A WHOLE WITHOUT THE WRITTEN PERMISSION OF MENCOM CORPORATION IS PROHIBITED.

SPECIFICATIONS

UNLESS OTHERWISE SPECIFIED:
DIMENSIONS ARE IN INCHES AND [MM]

MATERIAL

FINISH

DO NOT SCALE DRAWING

	NAME
DRAWN	JJH
CHECKED	
ENG APPR.	
MFG APPR.	
Q.A.	

COMMENTS:

MENCOM CORPORATION

TITLE:

SIZE	DWG. NO.	REV
B	JIN-640-008-M000	A

SCALE: 1:1.5 | WEIGHT: | SHEET 1 OF 1