WIRING		
MIN PIN #	PORT / PIN	FUNCTION
1	ALL PORTS PIN 1	DRAIN
2	ALL PORTS PIN 2	V+
3	ALL PORTS PIN 3	V-
4	ALL PORTS PIN 4	CAN_H
5	ALL PORTS PIN 5	CAN_L

REVISIONS			
REV.	DESCRIPTION	DATE	APPROVED
A	REDRAWN IN SW	8/28/2006	

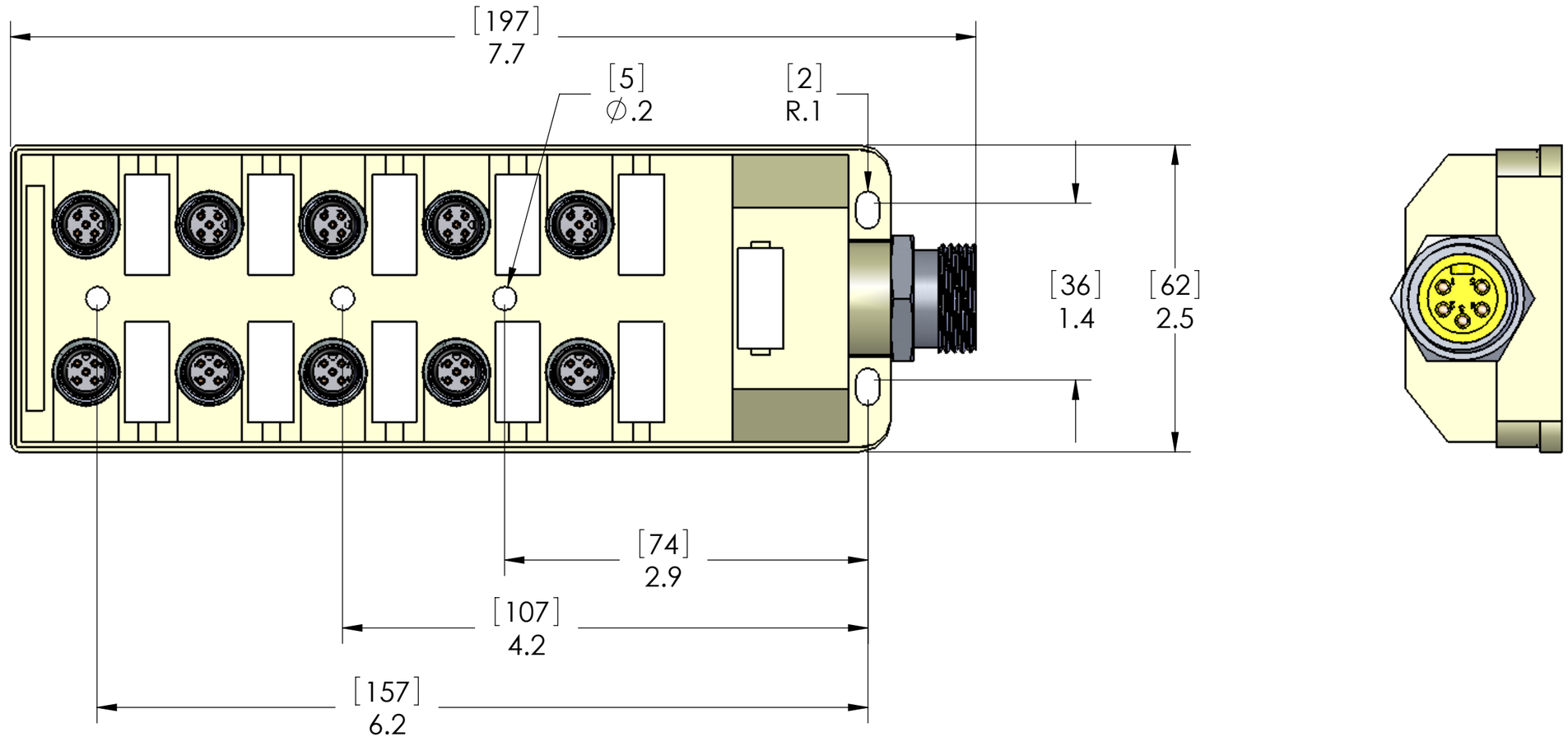

MATERIALS:	
BLOCK HOUSING:	POLYPROPYLENE
PORT CONN INSERTS:	POLYAMIDE
PORT CONN HSG:	NICKEL PLATED BRASS
CONTACTS:	GOLD PLATED COPPER ALLOY
OUTPUT CONN HSG:	ANODIZED ALUMINUM HSG
OUTPUT CONN INS.:	YELLOW PVC
O-RINGS:	NBR

PROPRIETARY AND CONFIDENTIAL

THE INFORMATION CONTAINED IN THIS DRAWING IS THE SOLE PROPERTY OF MENCOM CORPORATION. ANY REPRODUCTION IN PART OR AS A WHOLE WITHOUT THE WRITTEN PERMISSION OF MENCOM CORPORATION IS PROHIBITED.

UNLESS OTHERWISE SPECIFIED:

DIMENSIONS ARE IN INCHES
TOLERANCES:
FRACTIONAL ±1/64
ANGULAR: MACH ±5° BEND ±5°
TWO PLACE DECIMAL ±.01
THREE PLACE DECIMAL ±.004

MATERIAL

FINISH

DO NOT SCALE DRAWING

	NAME
DRAWN	BEM
CHECKED	
ENG APPR.	
MFG APPR.	
Q.A.	

COMMENTS:

MENCOM CORPORATION

TITLE:

SIZE B | DWG. NO. JDN-050-005-M000 | REV A

SCALE: 1:1 | WEIGHT: | SHEET 1 OF 1