WIRING	
COLOR	FUNCTION
J1 - +	V+ (ALL PORTS PIN 1)
J1 - -	V- (ALL PORTS PIN 3)
J1 - GND	GND (ALL PORTS PIN 5)
J1 - 1	PORT 1 PIN 4
J1 - 2	PORT 2 PIN 4
J1 - 3	PORT 3 PIN 4
J1 - 4	PORT 4 PIN 4
J1 - 5	PORT 5 PIN 4
J1 - 6	PORT 6 PIN 4

REVISIONS			
REV.	DESCRIPTION	DATE	APPROVED
A	REDRAWN IN SW	2/20/2007	

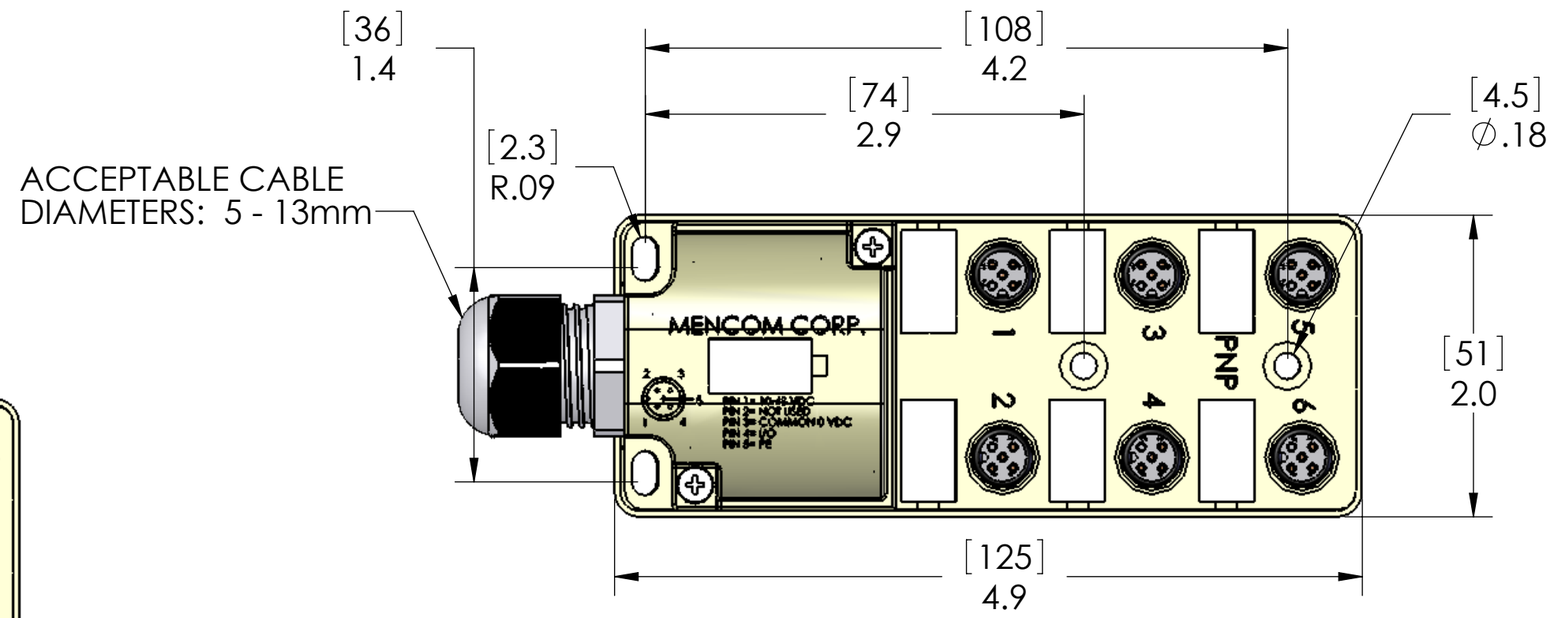

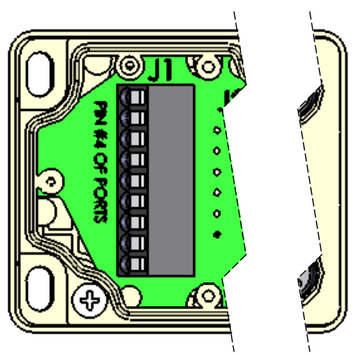

CONNECTIONS MADE
VIA SPRING CLAMP
TERMINAL BLOCKS

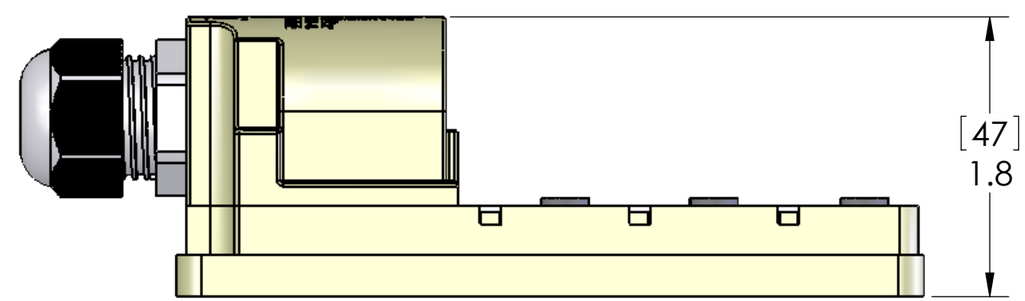

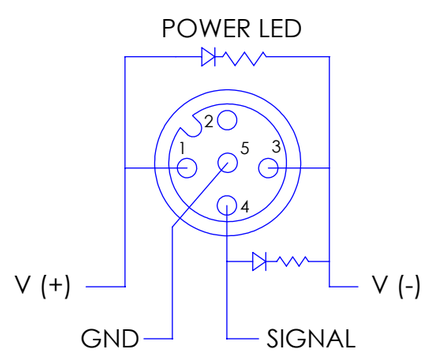

THIS IS A PNP BLOCK

MATERIALS:	
BODY:	PBT
MARKERS:	POLYAMIDE
INSERTS:	POLYAMIDE
GLAND:	POLYAMIDE
CONTACTS:	GOLD PLATED COPPER ALLOY
O-RINGS:	NBR
RATINGS:	
VOLTS:	48VDC MAX
AMPS:	3A PER PORT, 8A PER BLOCK

PROPRIETARY AND CONFIDENTIAL

THE INFORMATION CONTAINED IN THIS DRAWING IS THE SOLE PROPERTY OF MENCOM CORPORATION. ANY REPRODUCTION IN PART OR AS A WHOLE WITHOUT THE WRITTEN PERMISSION OF MENCOM CORPORATION IS PROHIBITED.

UNLESS OTHERWISE SPECIFIED:

DIMENSIONS ARE IN INCHES AND [MM]

MATERIAL

FINISH

DO NOT SCALE DRAWING

	NAME
DRAWN	DWM
CHECKED	
ENG APPR.	
MFG APPR.	
Q.A.	

COMMENTS:

MENCOM CORPORATION

TITLE:

SIZE	DWG. NO.	REV
B	JDC-64P-209-F000	A

SCALE: 1:1 | WEIGHT: | SHEET 1 OF 1