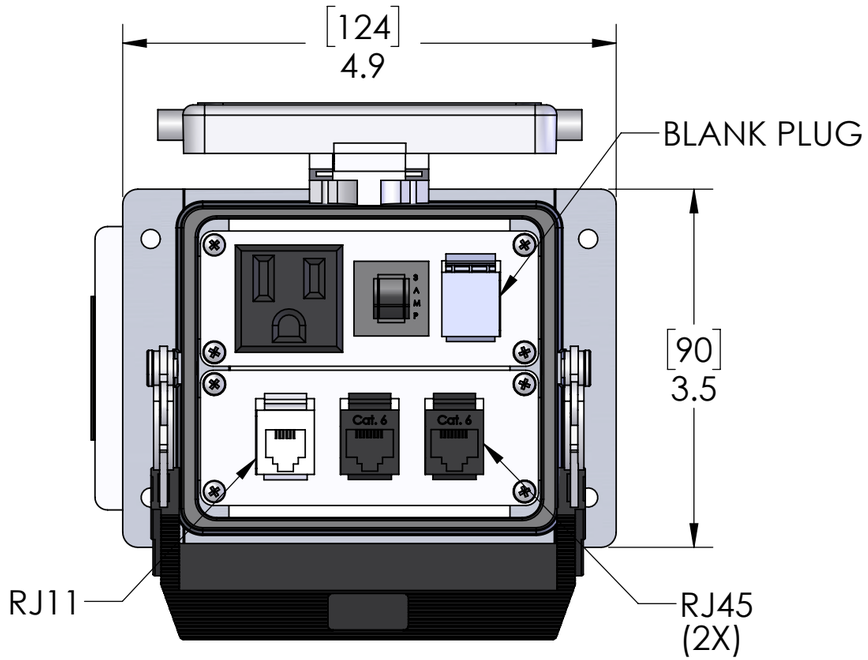

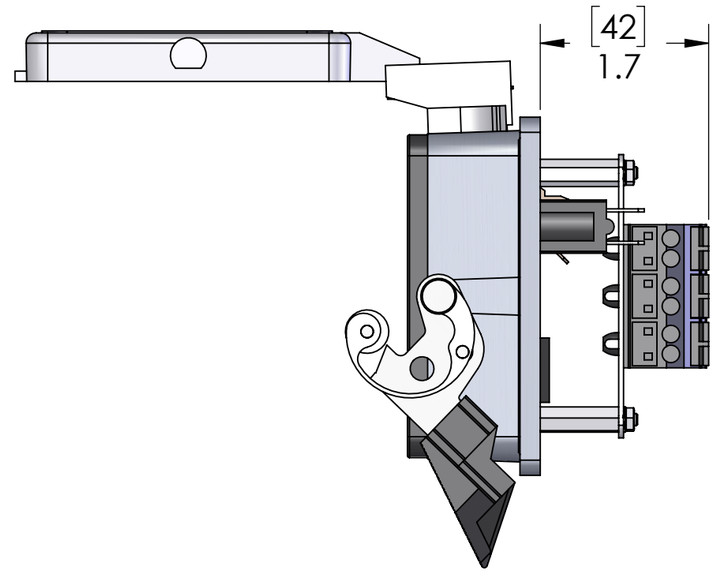

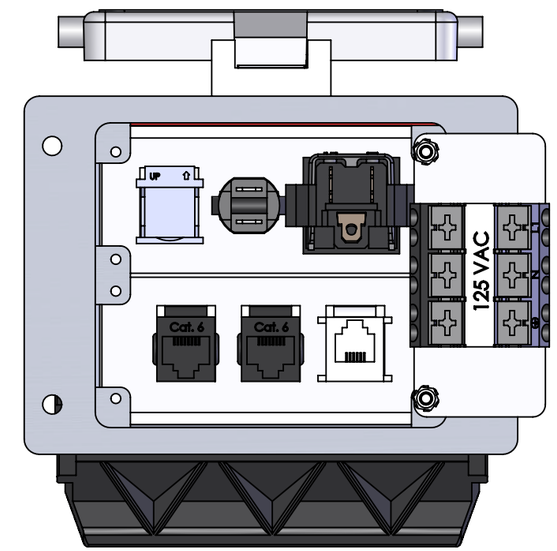

PANEL CUTOUT

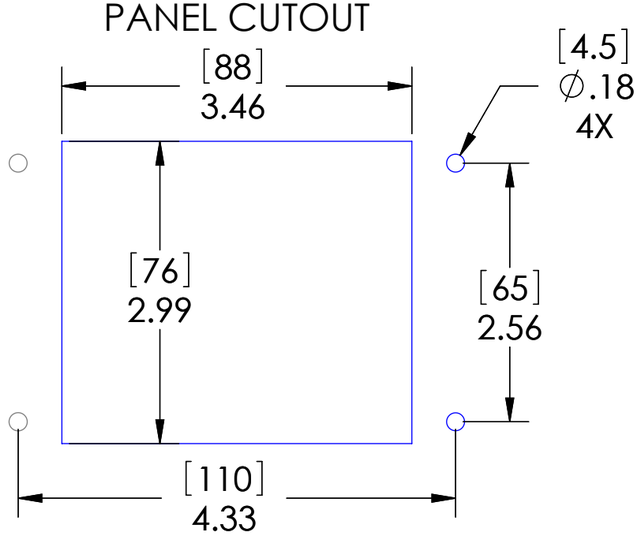

NOTE: RJ11 JACK IS TECHNICALLY AN RJ12 JACK IN THAT IT HAS ALL 6 CONTACTS. IT IS SUITABLE FOR USE WITH ALL RJ11 AND RJ12 APPLICATIONS.

CONN. TYPE	EXTERIOR	INTERIOR
RJ11	JACK	JACK
RJ45	CAT 6 JACK	CAT 6 JACK

These devices shall be mounted on enclosures having adequate strength and thickness and with adequate spacing provided. Seal rating is based on mounting to a surface that is clean, flat and smooth.

PIC RATINGS/SPECIFICATIONS	
VOLTS:	125V
AMPS:	3A
SCCR:	0.2kA
NEMA/UL | EN 60529:	4, 4X, 12 | IP65
MOUNTING SCREW SIZE:	M4 (8-32) (304 or 316SS for 4X)
MOUNTING SCREW TORQUE:	1.2~1.8N-m (0.9~1.3 Lb-Ft)
INCOMING POWER WIRE SIZE:	0.5 ~ 4.0 sq mm / 20-12AWG
WIRE STRIP LENGTH:	10 ~ 11 mm

HOUSING MATERIALS	
BODY:	EPOXY COATED DIE CAST ALUMINUM
GASKET:	THERMOPLASTIC ELASTOMER
HANDLE:	POLYAMIDE
LEVERS:	STAINLESS STEEL

MOUNTING KIT ORDERED SEPARATELY CONTAINS M4x0.7 SS SCREW, NYLON WASHER, SPLIT LOCKWASHER AND M4 NUT
P/N: D-PIC-MT

c UL us LISTED ENCL. ACC. 5JR2

UNLESS OTHERWISE SPECIFIED:
DIMENSIONS ARE IN INCHES AND [MM]

MATERIAL

FINISH

DO NOT SCALE DRAWING

DRAWN BY	DG
DRAWN DATE	08/03/2020
CHECKED BY	DCG
CHECK DATE	08/04/2020

COMMENTS:

MENCOM CORPORATION

TITLE:

SMPLX; RJ11; 2RJ45; 3A; 32

SIZE B | DWG. NO. DP1-RJ11-2RJ45-R-32 | REV C

SCALE: 2:3 | WEIGHT: | SHEET 1 OF 1

PROPRIETARY AND CONFIDENTIAL
THE INFORMATION CONTAINED IN THIS DRAWING IS THE SOLE PROPERTY OF MENCOM CORPORATION. ANY REPRODUCTION IN PART OR AS A WHOLE WITHOUT THE WRITTEN PERMISSION OF MENCOM CORPORATION IS PROHIBITED.