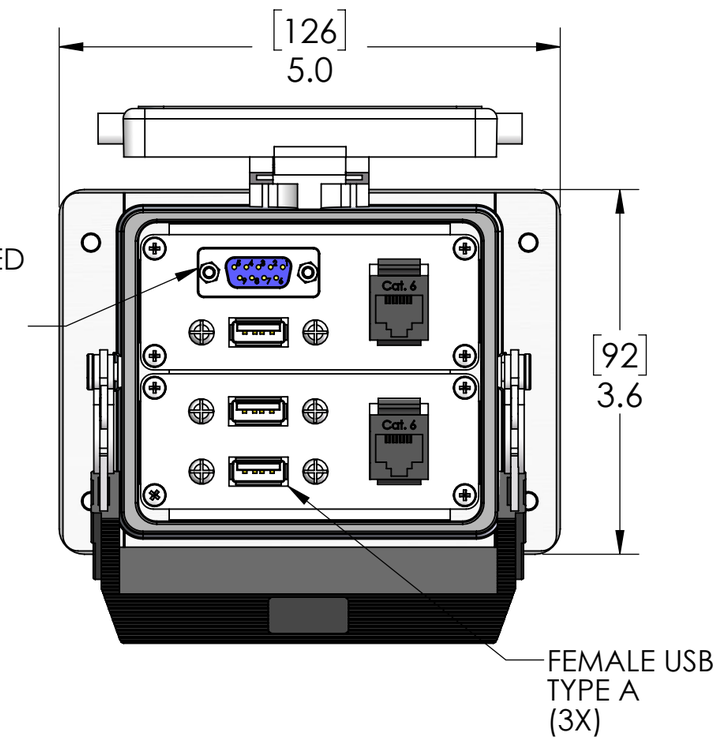

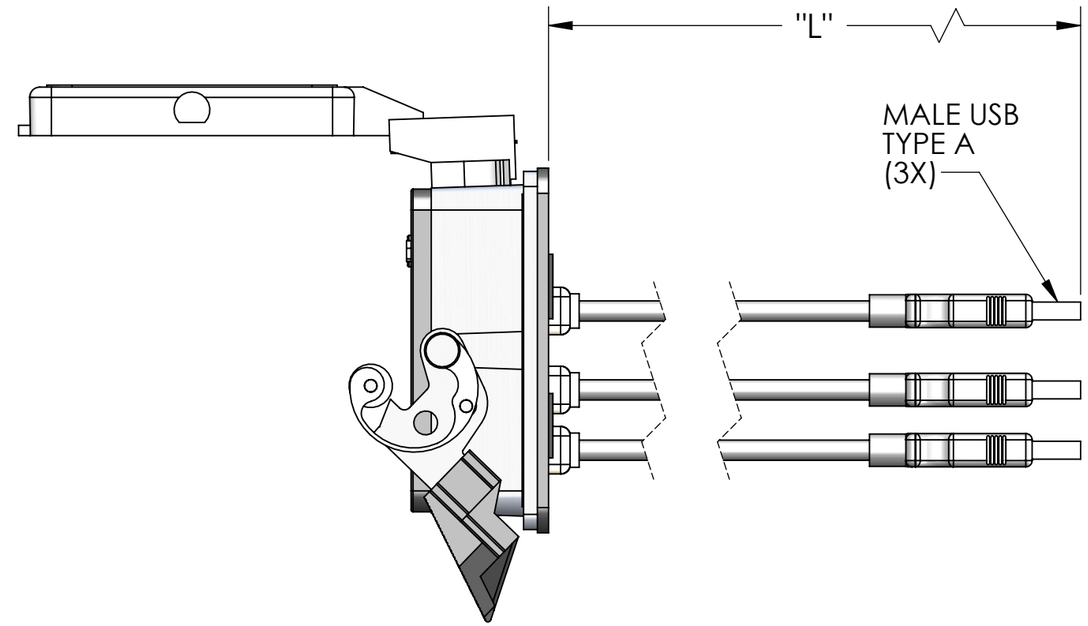

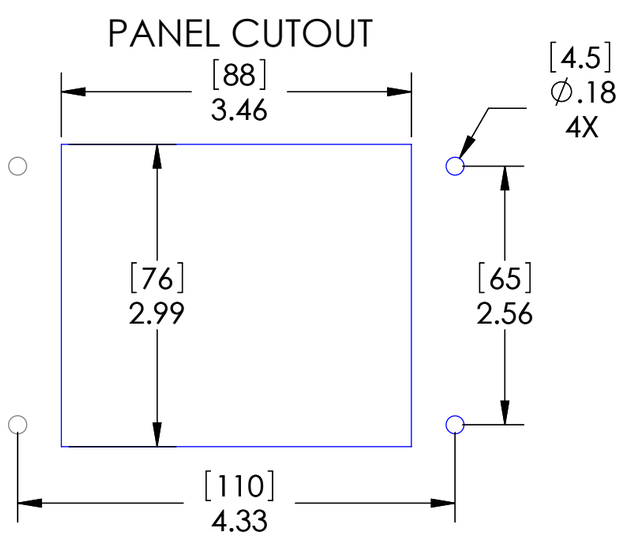

STANDARD CONFIGURATIONS UNLESS OTHERWISE NOTED		
CONN. TYPE	EXTERIOR	INTERIOR
RJ45	CAT. 6 JACK	CAT. 6 JACK

PART NUMBER	LENGTH "L"
DB09-2RJ45-3USB-03-32	3 FEET
DB09-2RJ45-3USB-06-32	6 FEET
DB09-2RJ45-3USB-10-32	10 FEET

These devices shall be mounted on enclosures having adequate strength and thickness and with adequate spacing provided. Seal rating is based on mounting to a surface that is clean, flat and smooth.

HOUSING MATERIALS	
BODY:	EPOXY COATED DIE CAST ALUMINUM
GASKET:	THERMOPLASTIC ELASTOMER
HANDLE:	POLYAMIDE
LEVERS:	STAINLESS STEEL

PIC RATINGS/SPECIFICATIONS	
NEMA/UL | EN 60529:	4, 4X, 12 | IP65
MOUNTING SCREW SIZE:	M4 (8-32) (304 or 316SS for 4X)
MOUNTING SCREW TORQUE:	1.2~1.8N-m (0.9~1.3 Lb-Ft)

OPERATING TEMPERATURE: (-10°C / +60° C (+14° F / +140° F))

MOUNTING KIT ORDERED SEPARATELY CONTAINS M4x0.7 SS SCREW, NYLON WASHER, SPLIT LOCKWASHER AND M4 NUT

P/N: D-PIC-MT

c UL us LISTED ENCL. ACC. 5JR2

UNLESS OTHERWISE SPECIFIED:

DIMENSIONS ARE IN INCHES AND [MM]

MATERIAL

FINISH

DO NOT SCALE DRAWING

DRAWN BY	DG
DRAWN DATE	07/13/2021
CHECKED BY	DCG
CHECK DATE	07/15/2021

COMMENTS:

PROPRIETARY AND CONFIDENTIAL

THE INFORMATION CONTAINED IN THIS DRAWING IS THE SOLE PROPERTY OF MENCOM CORPORATION. ANY REPRODUCTION IN PART OR AS A WHOLE WITHOUT THE WRITTEN PERMISSION OF MENCOM CORPORATION IS PROHIBITED.

MENCOM CORPORATION

TITLE:

DB9; 2 RJ45; 3 USB-ZZ; 32

SIZE	DWG. NO.	REV
B	DB09-2RJ45-3USB-ZZ-32	C

SCALE: 2:3 | WEIGHT: | SHEET 1 OF 1