REVISIONS			
REV.	DESCRIPTION	DATE	APPROVED
A	REDRAWN IN SW	1/25/2012	DCT

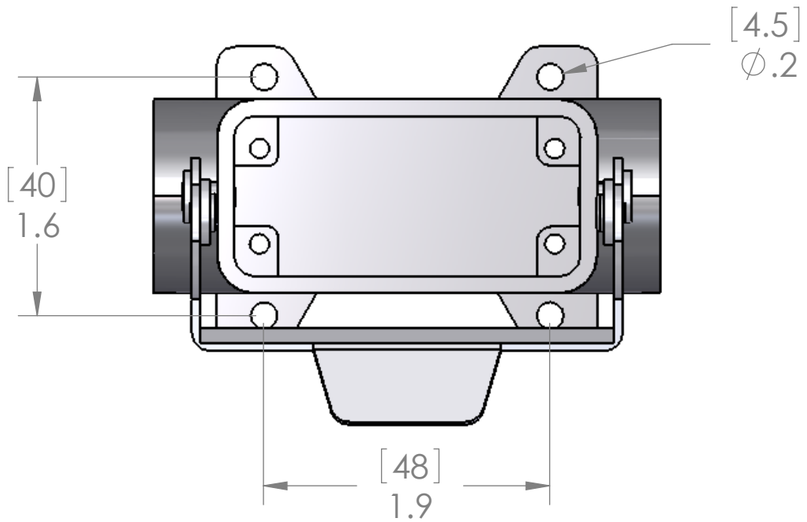

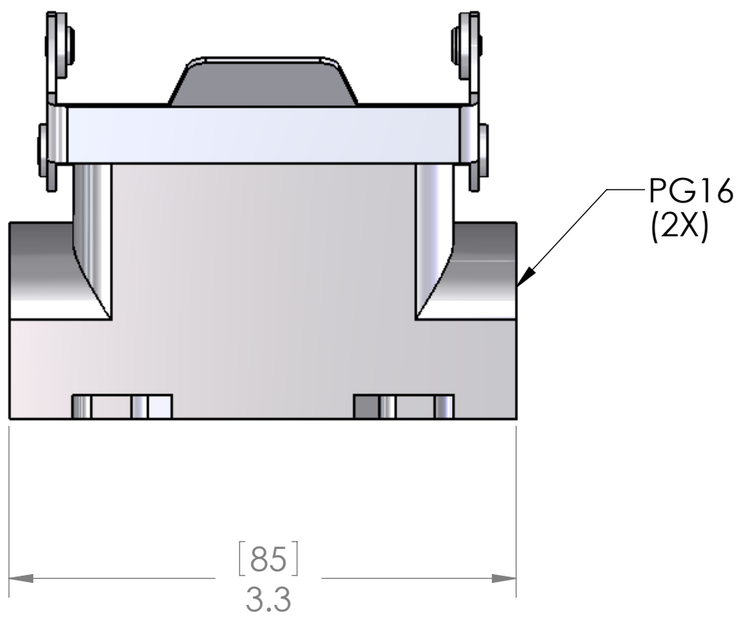

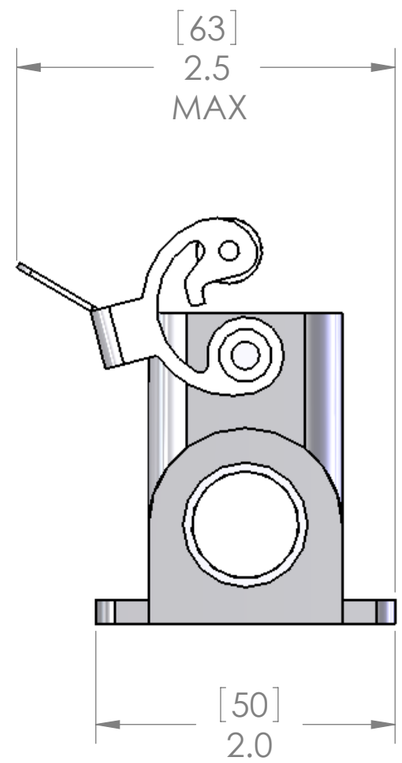

HOUSING MATERIALS	
BODY:	EPOXY COATED DIE CAST ALUMINUM
HANDLE:	STAINLESS STEEL
APPROVALS	
CE MARKING	

PIC RATINGS	
TYPE	4, 4X, 12

PROPRIETARY AND CONFIDENTIAL
THE INFORMATION CONTAINED IN THIS DRAWING IS THE SOLE PROPERTY OF MENCOM CORPORATION. ANY REPRODUCTION IN PART OR AS A WHOLE WITHOUT THE WRITTEN PERMISSION OF MENCOM CORPORATION IS PROHIBITED.

UNLESS OTHERWISE SPECIFIED:
DIMENSIONS ARE IN INCHES AND [MM]

MATERIAL

FINISH

DO NOT SCALE DRAWING

	NAME
DRAWN	CAM
CHECKED	
ENG APPR.	
MFG APPR.	
Q.A.	

COMMENTS:

MENCOM CORPORATION

TITLE:

SIZE	DWG. NO.	REV
B	CZP-15L2	A
SCALE: 1:1	WEIGHT:	SHEET 1 OF 1

SEAL RATING OF IP 65 ONLY ACHIEVED WHEN FULLY LATCHED TO MATING HOOD