REVISIONS			
REV.	DESCRIPTION	DATE	APPROVED
A	REDRAWN IN SW	8/1/2006	

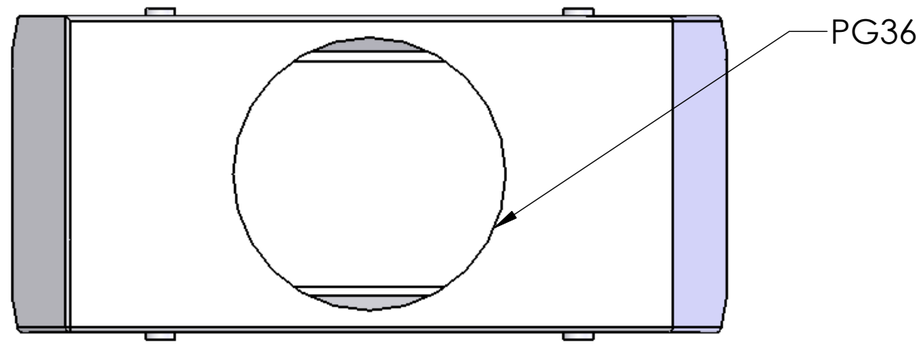

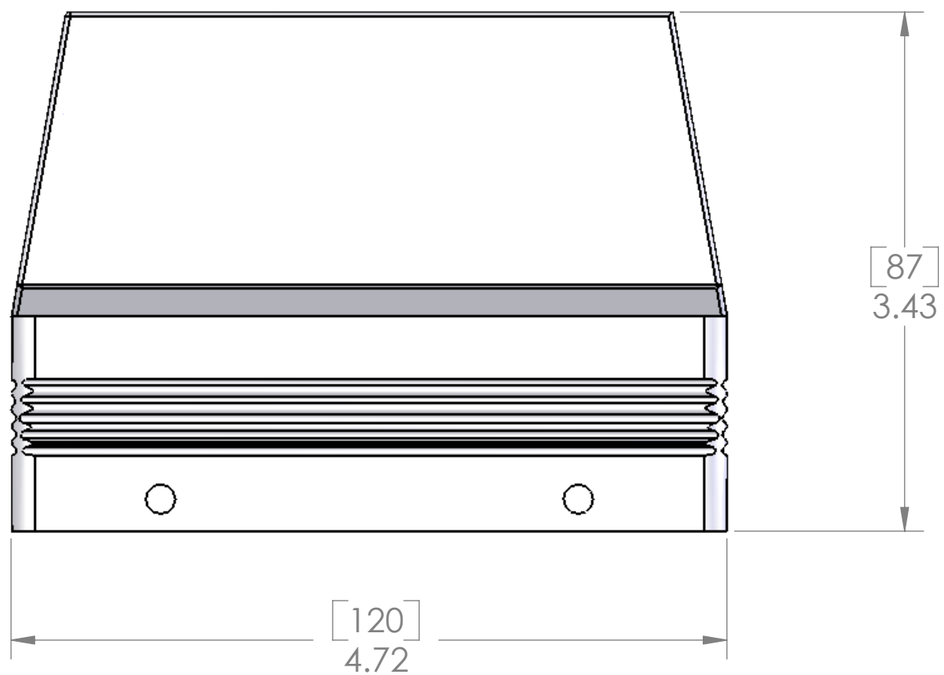

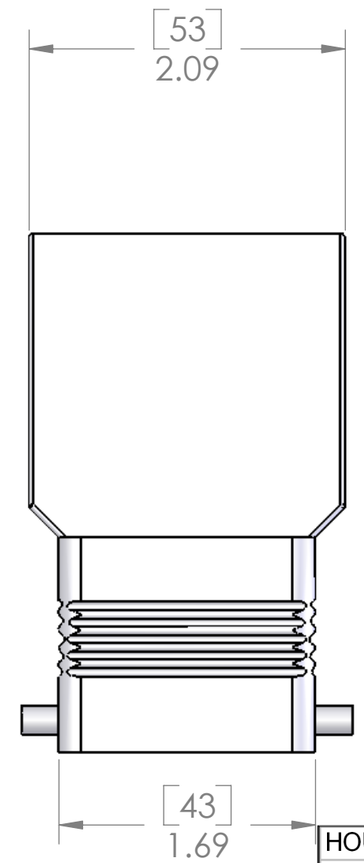

HOUSING MATERIALS	
BODY:	EPOXY COATED DIE CAST ALUMINUM

SEAL RATING OF IP 65 ONLY ACHIEVED WHEN FULLY LATCHED TO MATING BASE AND WITH AN APPROPRIATE SEALING GLAND INSTALLED

PROPRIETARY AND CONFIDENTIAL
THE INFORMATION CONTAINED IN THIS DRAWING IS THE SOLE PROPERTY OF MENCOM CORPORATION. ANY REPRODUCTION IN PART OR AS A WHOLE WITHOUT THE WRITTEN PERMISSION OF MENCOM CORPORATION IS PROHIBITED.

UNLESS OTHERWISE SPECIFIED:
DIMENSIONS ARE IN INCHES AND [MM]
MATERIAL
FINISH
DO NOT SCALE DRAWING

	NAME
DRAWN	DWM
CHECKED	
ENG APPR.	
MFG APPR.	
Q.A.	
COMMENTS:	

MENCOM CORPORATION

TITLE:

SIZE	DWG. NO.	REV
B	CQV-24	A
SCALE: 1:1	WEIGHT:	SHEET 1 OF 1