REVISIONS			
REV.	DESCRIPTION	DATE	APPROVED
A	INITIAL RELEASE	8/14/2007	BEM

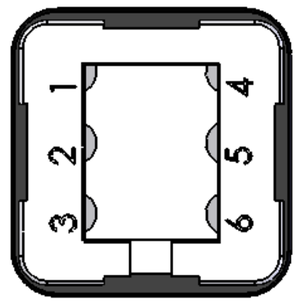

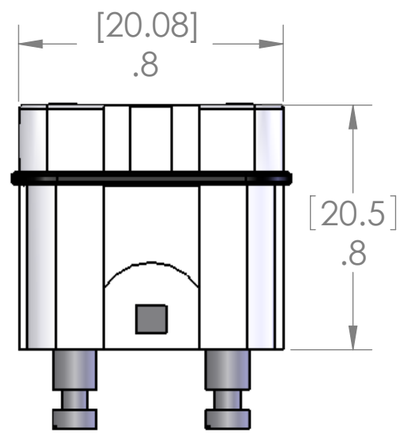

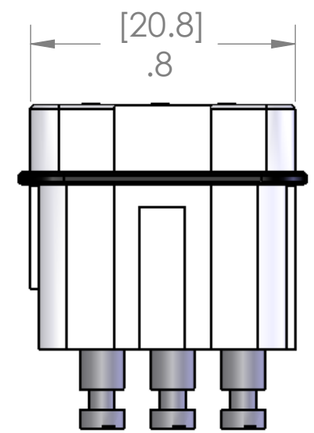

MATERIALS	
HOUSING:	GLASS REINFORCED THERMOPLASTIC
SCREWS:	COPPER ALLOY, SILVER PLATED
TEMP RANGE:	-40°C TO 80°C
RATINGS:	UL 48V, 10A. VDE: 60V, 10A CSA: 48V, 10A
APPROVALS:	UL & CSA

PROPRIETARY AND CONFIDENTIAL

THE INFORMATION CONTAINED IN THIS DRAWING IS THE SOLE PROPERTY OF MENCOM CORPORATION. ANY REPRODUCTION IN PART OR AS A WHOLE WITHOUT THE WRITTEN PERMISSION OF MENCOM CORPORATION IS PROHIBITED.

UNLESS OTHERWISE SPECIFIED:

DIMENSIONS ARE IN INCHES AND [MM]

MATERIAL

FINISH

DO NOT SCALE DRAWING

	NAME
DRAWN	CAM
CHECKED	
ENG APPR.	
MFG APPR.	
Q.A.	

COMMENTS:

MENCOM CORPORATION

TITLE:

SIZE	DWG. NO.	REV
B	CNSTF-06	A

SCALE: 2:1 WEIGHT: SHEET 1 OF 1