REVISIONS			
REV.	DESCRIPTION	DATE	APPROVED
A	REDRAWN IN SW	6/2/2005	

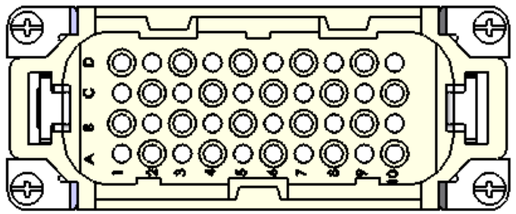

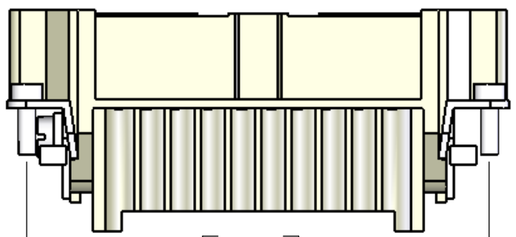

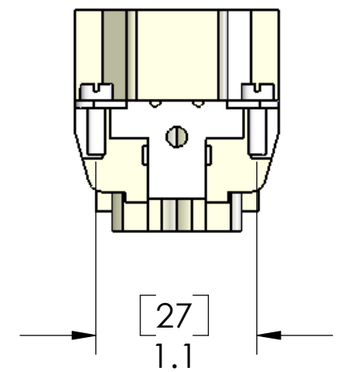

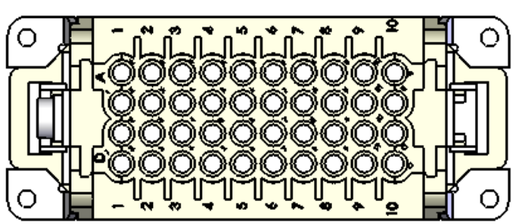

MATERIALS	
HOUSING:	GLASS REINFORCED THERMOPLASTIC
	NICKEL PLATED BRASS HARDWARE
SCREWS:	NICKEL PLATED BRASS
RATINGS:	UL - 600V, 10A. EN 250V/4kV/3, 10A
APPROVALS:	UL & CSA

PROPRIETARY AND CONFIDENTIAL

THE INFORMATION CONTAINED IN THIS DRAWING IS THE SOLE PROPERTY OF MENCOM CORPORATION. ANY REPRODUCTION IN PART OR AS A WHOLE WITHOUT THE WRITTEN PERMISSION OF MENCOM CORPORATION IS PROHIBITED.

UNLESS OTHERWISE SPECIFIED:

DIMENSIONS ARE IN INCHES AND [MM]

MATERIAL

FINISH

DO NOT SCALE DRAWING

	NAME
DRAWN	DWM
CHECKED	
ENG APPR.	
MFG APPR.	
Q.A.	

COMMENTS:

MENCOM CORPORATION

TITLE:

SIZE	DWG. NO.	REV
B	CDM-40	A
SCALE: 1:1	WEIGHT:	SHEET 1 OF 1