| REVISIONS | | | |
|---|---|---|---|
| REV. | DESCRIPTION | DATE | APPROVED |
| A | REDRAWN IN SW | 9/1/2006 | |

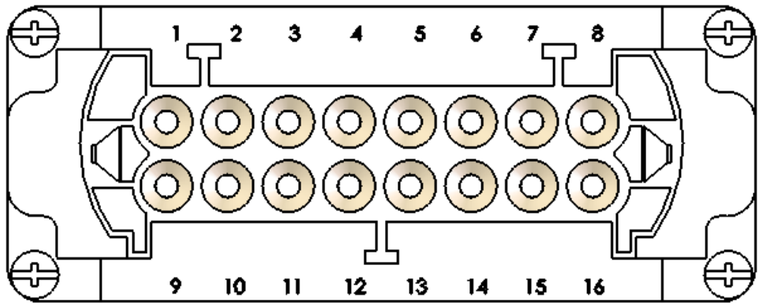


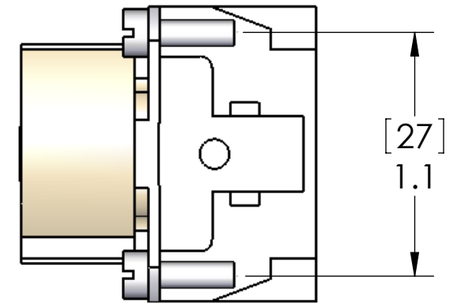

USE WITH ILME CRIMP CONTACTS: CCFA-X.X

| MATERIALS | |
|---|---|
| | |
| HOUSING: | GLASS REINFORCED THERMOPLASTIC |
| | NICKEL PLATED BRASS HARDWARE |
| SCREWS: | NICKEL PLATED BRASS |
| | |
| | |
| RATINGS: | UL - 600V, 10A. EN 250V/4kV/3, 10A |
| | |
| APPROVALS: | UL & CSA |

**PROPRIETARY AND CONFIDENTIAL**

THE INFORMATION CONTAINED IN THIS DRAWING IS THE SOLE PROPERTY OF MENCOM CORPORATION. ANY REPRODUCTION IN PART OR AS A WHOLE WITHOUT THE WRITTEN PERMISSION OF MENCOM CORPORATION IS PROHIBITED.

UNLESS OTHERWISE SPECIFIED:

DIMENSIONS ARE IN INCHES AND [MM]

MATERIAL

FINISH

DO NOT SCALE DRAWING

| | NAME |
|---|---|
| DRAWN | CAM |
| CHECKED | |
| ENG APPR. | |
| MFG APPR. | |
| Q.A. | |

COMMENTS:

MENCOM CORPORATION

TITLE:

16 POLE MALE
CRIMP INSERT 16A

| SIZE | DWG. NO. | REV |
|---|---|---|
| B | CCEF-16 | A |

SCALE: 3:2 | WEIGHT: | SHEET 1 OF 1